PIN #	COLOR
1	YELLOW
2	WHITE
3	ORANGE
4	BLUE
SHELL	SHIELD

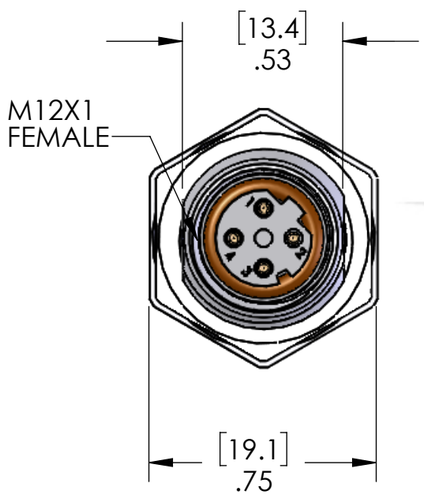

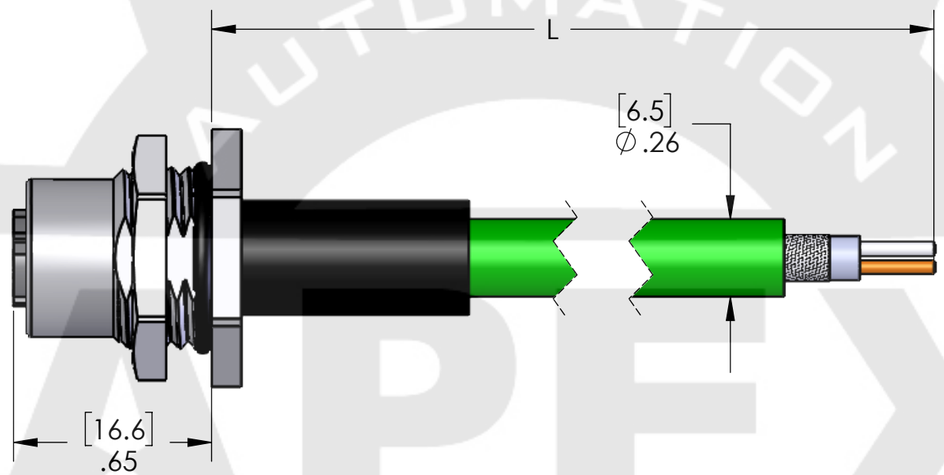

TABLE A	
P/N	L
PND45-4FSR-BM-1M	40" [1m]
PND45-4FSR-BM-2M	79" [2m]
PND45-4FSR-BM-3M	118" [3m]
PND45-4FSR-BM-4M	157" [4m]
PND45-4FSR-BM-5M	197" [5m]
PND45-4FSR-BM-6M	236" [6m]
PND45-4FSR-BM-8M	315" [8m]
PND45-4FSR-BM-9M	354" [9m]
PND45-4FSR-BM-10M	393" [10m]
PND45-4FSR-BM-15M	590" [15m]
PND45-4FSR-BM-20M	786" [20m]
PND45-4FSR-BM-25M	983" [25m]
PND45-4FSR-BM-30M	1179" [30m]

MATERIALS	
BODY:	NICKEL PLATED BRASS
INSERT:	POLYAMIDE
CONTACTS:	GOLD PLATED COPPER ALLOY
CABLE:	22/4 PROFINET CBL, GREEN PVC JACKET
O-RINGS:	NBR & FPM
JAM NUT:	NICKEL PLATED BRASS
HEAT SHRINK:	POLYELFIN

CERTIFICATIONS:	
US:	UL LISTED
CANADA:	C-UL LISTED
RoHS:	YES
CE:	YES

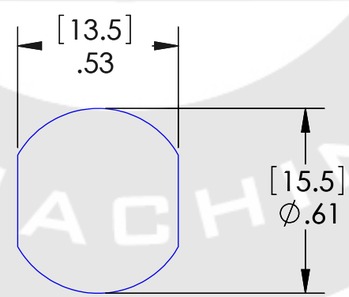

RECOMMENDED
MOUNTING HOLE

PROPRIETARY AND CONFIDENTIAL
THE INFORMATION CONTAINED IN THIS DRAWING IS THE SOLE PROPERTY OF MENCOM CORPORATION. ANY REPRODUCTION IN PART OR AS A WHOLE WITHOUT THE WRITTEN PERMISSION OF MENCOM CORPORATION IS PROHIBITED.

VOLTS	30V
AMPS	4A
TEMP:	80°C

UNLESS OTHERWISE SPECIFIED:
DIMENSIONS ARE IN INCHES AND [MM]

MATERIAL

FINISH

DO NOT SCALE DRAWING

DRAWN BY	JJH
DRAWN DATE	04/27/2020
CHECKED BY	ADM
CHECK DATE	04/28/2020

COMMENTS:

MENCOM CORPORATION

TITLE:

SIZE	DWG. NO.	REV
B	PND45-4FSR-BM-ZZ	B
SCALE: 2:1	WEIGHT:	SHEET 1 OF 1