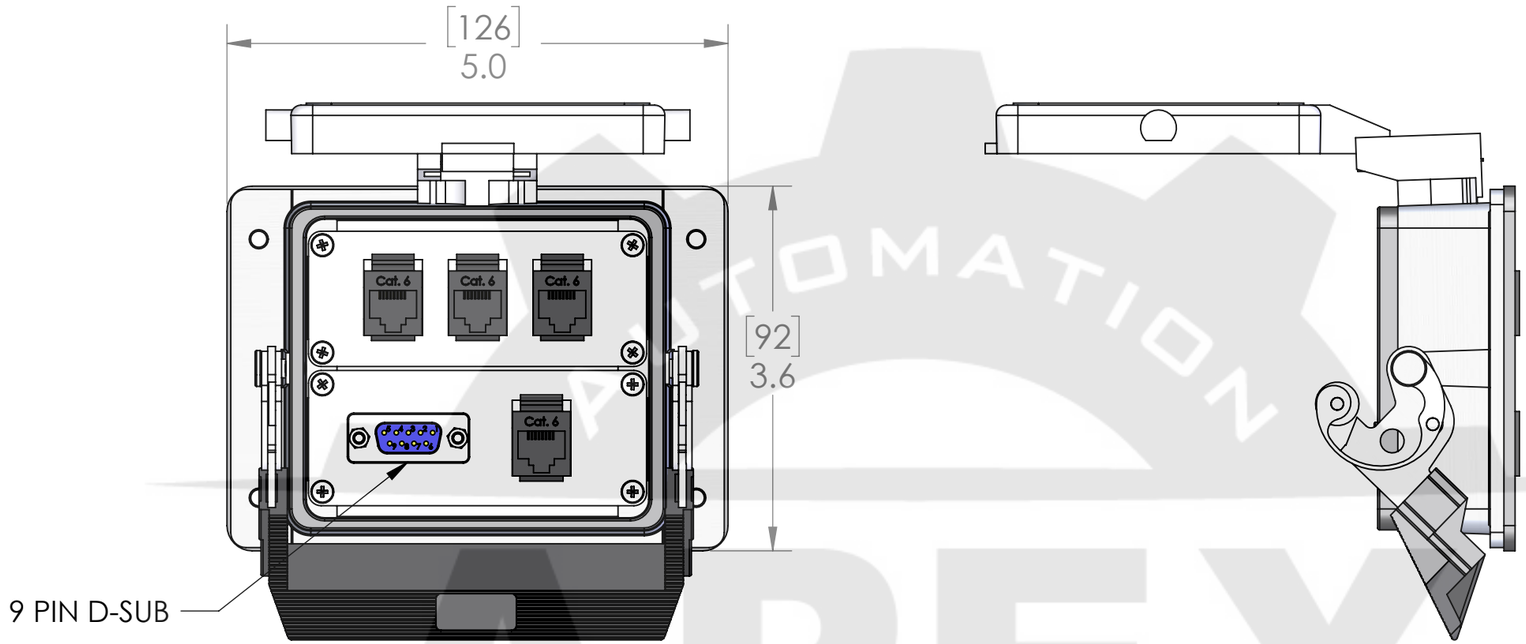


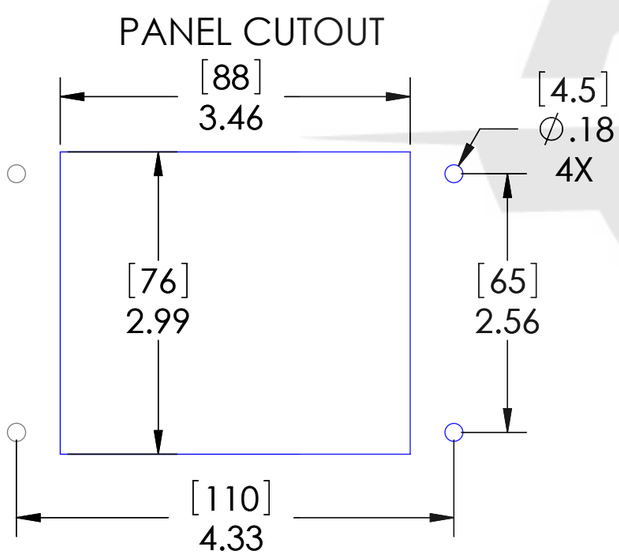


These devices shall be mounted on enclosures having adequate strength and thickness and with adequate spacing provided. Seal rating is based on mounting to a surface that is clean, flat and smooth.

| HOUSING MATERIALS | |
|---|---|
| BODY: | EPOXY COATED DIE CAST ALUMINUM |
| GASKET: | THERMOPLASTIC ELASTOMER |
| HANDLE: | POLYAMIDE |
| LEVERS: | STAINLESS STEEL |

| PIC RATINGS/SPECIFICATIONS | |
|---|---|
| NEMA/UL \| EN 60529: | 4, 4X, 12 \| IP65 |
| MOUNTING SCREW SIZE: | M4 (8-32) (304 or 316SS for 4X) |
| MOUNTING SCREW TORQUE: | 1.2~1.8N-m (0.9~1.3 Lb-Ft) |

OPERATING TEMPERATURE: (-10°C / +60° C (+14° F / +140° F ))

MOUNTING KIT ORDERED SEPARATELY CONTAINS M4x0.7 SS SCREW, NYLON WASHER, SPLIT LOCKWASHER AND M4 NUT

**P/N: D-PIC-MT**

c UL us LISTED ENCL. ACC. 5JR2

UNLESS OTHERWISE SPECIFIED:

DIMENSIONS ARE IN INCHES AND [MM]

MATERIAL

FINISH

DO NOT SCALE DRAWING

| | |
|---|---|
| DRAWN BY | ADM |
| DRAWN DATE | 07/15/2021 |
| CHECKED BY | DCG |
| CHECK DATE | 07/15/2021 |

COMMENTS:

MENCOM CORPORATION

TITLE:

DB9; 4 RJ45; 32

| SIZE | DWG. NO. | REV |
|---|---|---|
| B | DB09-4RJ45-32LS | C |

SCALE: 2:3 | WEIGHT: | SHEET 1 OF 1

**PROPRIETARY AND CONFIDENTIAL**

THE INFORMATION CONTAINED IN THIS DRAWING IS THE SOLE PROPERTY OF MENCOM CORPORATION. ANY REPRODUCTION IN PART OR AS A WHOLE WITHOUT THE WRITTEN PERMISSION OF MENCOM CORPORATION IS PROHIBITED.

| STANDARD CONFIGURATIONS UNLESS OTHERWISE NOTED | | |
|---|---|---|
| CONN. TYPE | EXTERIOR | INTERIOR |
| RJ45 | CAT. 6 JACK | CAT. 6 JACK |
| ALL D-SUBS | FEMALE | MALE |