Invertek Drives.com

Member of Sumitomo Drive Technologies

User Guide

OPTIDRIVE™ CP2

AC Variable Speed Drive

0.75 - 250kW / 1 - 400HP
200 - 600V Single and 3 Phase Input

Quick Start Up 1
General Information and Ratings 2
Mechanical Installation 3
Electrical Installation 4
Keypad and Display Operation 5
Parameters 6
Control Terminal Functions 7
Extended Parameters 8
Serial Communications 9
Technical Data 10
Troubleshooting 11
Energy Efficiency Classification 12

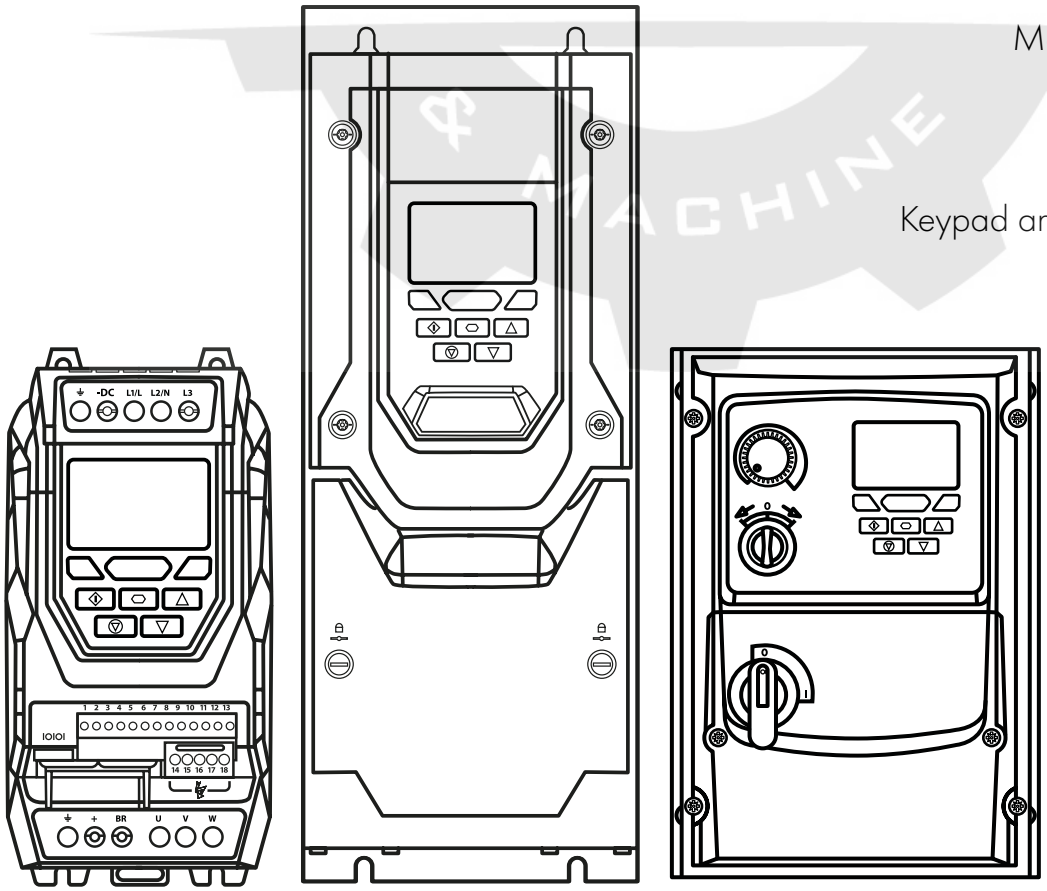

AUTOMATION APEX & MACHINE

1. Quick Start Up **4**
1.1. Important Safety Information 4
1.2. Quick Start Process 5
2. General Information and Ratings **6**
2.1. Identifying the Drive by Model Number 6
2.2. Product Rating Label Location 6
2.3. Understanding the Rating Label 7
2.3. Understanding the Rating Label 7
2.4. Drive Model Numbers – IP20 7
2.5. Drive Model Numbers – IP55 9
2.6. Drive Model Numbers – IP66 Non-switched 10
2.7. Drive Model Numbers – IP66 Switched 11
3. Mechanical Installation **12**
3.1. General 12
3.2. Before Installation 12
3.3. UL Compliant Installation 12
3.4. Installation Following a Period of Storage 12
3.5. Mechanical Dimensions and Weight 13
3.6. Guidelines for Enclosure Mounting (IP20 Units) 16
3.7. Mounting the Drive – IP20 Units 17
3.8. Drive Enclosure Dimensioning 17
3.9. Guidelines for Mounting (IP55 Units) 18
3.10. Guidelines for Mounting (IP66 Units) 19
3.11. Installing the IP66 Sun Shade 20
3.12. Removing the Terminal Cover 21
3.13. Routine Maintenance 23
3.14. IP66 (NEMA 4X) Lock Off 23
4. Electrical Installation **24**
4.1. Connection Diagram 24
4.2. Protective Earth (PE) Connection 26
4.3. Incoming Power Connection 26
4.4. Operation of 3 Phase drives from a Single Phase Supply 27
4.5. Operation with DC Power Supply or Common DC Bus 27
4.6. Motor Connection 28
4.7. Motor Terminal Box Connections 23
4.8. Connecting a Brake Resistor 29
4.9. Control Terminal Wiring 30
4.10. Control Terminal Connections 31
4.11. IP66 Switched Version Integrated Control Switch and Potentiometer Wiring 32
4.12. Motor Thermal Overload Protection 32
4.13. EMC Compliant Installation 33
4.14. Safe Torque Off 35
5. Keypad and Display Operation **39**
5.1. Keypad and Display Layout 39
5.2. Selecting the Language on the TFT Display 39
5.3. Additional Display Messages 40
5.4. Changing Parameters 41
5.5. Parameter Factory Reset / User Reset 41
5.6. Resetting the Drive Following a Trip 41
5.7. Keypad Shortcuts 42
6. Parameters **43**
6.1. Parameter Set Overview 43
6.2. Parameter Group 1 – Basic Parameters 43
7. Control Terminal Functions **46**
7.1. Control Source Selection 46
7.2. Digital Input Configuration Parameter P1-13 48
7.3. Example Connection Schematics 49
8. Extended Parameters **53**
8.1. Parameter Group 2 - Extended Parameters 53
8.2. Parameter Group 3 – PID Control 58
8.3. Parameter Group 4 – High Performance Motor Control 59
8.4. Parameter Group 5 – Communication Parameters 62
8.5. Advanced Parameters 65
8.6. Parameter Group 0 – Monitoring Parameters (Read Only) 68
9. Serial Communications **70**
9.1. RS-485 Communications 70
9.2. Modbus RTU Communications 71
9.3. CAN Open Communication 73
10. Technical Data **78**
10.1. Environmental 78
10.2. Input/Output Power and Current Ratings 78
10.3. Input Power Supply Requirements 81
10.4. Additional Information for UL Approved Installations 81
10.5. Derating Information 82
10.6. Internal EMC Filter and Varistors – Disconnection Procedure 83
11. Troubleshooting **84**
11.1. Fault Messages 84
12. Energy Efficiency Classification **87**

General Information

It is the responsibility of the installer to ensure that the equipment or system into which the product is incorporated complies with all relevant legislation and codes of practice which apply in the country of use.

CE Marking

All Invertek Drives products intended for use within the European Union carry the CE mark to indicate compliance with European Directives.

A declaration of conformity is available from the website, www.invertekdrives.com

For compliance with the European EMC Directive, the necessary guidance is provided within this document and it is the responsibility of the installer to ensure this guidance is followed to ensure compliance.

UL Conformity

A list of currently listed products is available from the UL website, www.ul.com.

For compliance with UL requirements, the necessary guidance is provided within this document and it is the responsibility of the installer to ensure this guidance is followed to ensure compliance.

Safe Torque OFF ("STO") Function

Optidrive P2 incorporates a hardware STO (Safe Torque Off) Function, designed in accordance with the standards listed below.

Standard	Classification	Independent Approval
EN 61800-5-2:2016	Type 2	*TUV
EN ISO 13849-1:2015	PL "d"	
EN 61508 (Part 1 to 7):2010	SIL 2	
EN60204-1:2006 + A1:2009 + AC: 2010	Uncontrolled Stop "Category 0"	
EN 62061:2005/A2:2015	SIL CL 2	

Copyright Invertek Drives Ltd © 2021

All rights reserved. No part of this User Guide may be reproduced or transmitted in any form or by any means, electrical or mechanical including photocopying, recording or by any information storage or retrieval system without permission in writing from the publisher.

2 Year Warranty

All Invertek Optidrive units carry a 2 year warranty against manufacturing defects from the date of manufacture. The manufacturer accepts no liability for any damage caused during or resulting from transport, receipt of delivery, installation or commissioning. The manufacturer also accepts no liability for damage or consequences resulting from inappropriate, negligent or incorrect installation, incorrect adjustment of the operating parameters of the drive, incorrect matching of the drive to the motor, incorrect installation, unacceptable dust, moisture, corrosive substances, excessive vibration or ambient temperatures outside of the design specification.

The local distributor may offer different terms and conditions at their discretion, and in all cases concerning warranty, the local distributor should be contacted first.

This user guide is the "original instructions" document. All non-English versions are translations of the "original instructions".

The contents of this User Guide are believed to be correct at the time of printing. In the interest of a commitment to a policy of continuous improvement, the manufacturer reserves the right to change the specification of the product or its performance or the contents of the User Guide without notice.

This User Guide is for use with version 2.51 Firmware. User Guide Revision 3.08.

Invertek Drives Ltd adopts a policy of continuous improvement and whilst every effort has been made to provide accurate and up to date information, the information contained in this User Guide should be used for guidance purposes only and does not form the part of any contract.

⚠	When installing the drive on any power supply where the phase-ground voltage may exceed the phase-phase voltage (typically IT supply networks or Marine vessels) it is essential that the internal EMC filter ground and surge protection varistor ground (where fitted) are disconnected. If in doubt, refer to your Sales Partner for further information.
⚠	This manual is intended as a guide for proper installation. Invertek Drives Ltd cannot assume responsibility for the compliance or the non-compliance to any code, national, local or otherwise, for the proper installation of this drive or associated equipment. A hazard of personal injury and/or equipment damage exists if codes are ignored during installation.
⚠	This Optidrive contains high voltage capacitors that take time to discharge after removal of the main supply. Before working on the drive, ensure isolation of the main supply from line inputs. Wait ten (10) minutes for the capacitors to discharge to safe voltage levels. Failure to observe this precaution could result in severe bodily injury or loss of life.
⚠	Only qualified electrical personnel familiar with the construction and operation of this equipment and the hazards involved should install, adjust, operate, or service this equipment. Read and understand this manual and other applicable manuals in their entirety before proceeding. Failure to observe this precaution could result in severe bodily injury or loss of life.

1. Quick Start Up

1.1. Important Safety Information

Please read the IMPORTANT SAFETY INFORMATION below, and all Warning and Caution information elsewhere.

Danger: Indicates a risk of electric shock, which, if not avoided, could result in damage to the equipment and possible injury or death.

This variable speed drive product (Optidrive) is intended for professional incorporation into complete equipment or systems as part of a fixed installation. If installed incorrectly it may present a safety hazard. The Optidrive uses high voltages and currents, carries a high level of stored electrical energy, and is used to control mechanical plant that may cause injury. Close attention is required to system design and electrical installation to avoid hazards in either normal operation or in the event of equipment malfunction. Only qualified electricians are allowed to install and maintain this product.

System design, installation, commissioning and maintenance must be carried out only by personnel who have the necessary training and experience. They must carefully read this safety information and the instructions in this Guide and follow all information regarding transport, storage, installation and use of the Optidrive, including the specified environmental limitations.

Do not perform any flash test or voltage withstand test on the Optidrive. Any electrical measurements required should be carried out with the Optidrive disconnected.

Electric shock hazard! Disconnect and ISOLATE the Optidrive before attempting any work on it. High voltages are present at the terminals and within the drive for up to 10 minutes after disconnection of the electrical supply. Always ensure by using a suitable multimeter that no voltage is present on any drive power terminals prior to commencing any work.

Where supply to the drive is through a plug and socket connector, do not disconnect until 10 minutes have elapsed after turning off the supply.

Ensure correct earthing connections and cable selection as defined by local legislation or codes. The drive may have a leakage current of greater than 3.5mA; furthermore the earth cable must be sufficient to carry the maximum supply fault current which normally will be limited by the fuses or MCB. Suitably rated fuses or MCB should be fitted in the mains supply to the drive, according to any local legislation or codes.

Do not carry out any work on the drive control cables whilst power is applied to the drive or to the external control circuits.

The "Safe Torque Off" Function does not prevent high voltages from being present at the drives power terminals.

Danger: Indicates a potentially hazardous situation other than electrical, which if not avoided, could result in damage to property.

Within the European Union, all machinery in which this product is used must comply with the Machinery Directive 2006/42/EC, Safety of Machinery. In particular, the machine manufacturer is responsible for ensuring that the electrical equipment complies with EN60204-1 and providing a disconnecting device which must be one of the following types:

- A switch-disconnector, utilization category AC-23B (EN 60947-3).
- A circuit breaker suitable for isolation in accordance with EN 60947-2.
- A disconnector with an integrated auxiliary contact that ensures under all circumstances the switching devices break the load circuit prior to opening of the main contacts of the disconnector (EN 60947-3).

For installation in other regions, conformance with local electrical regulations and codes of practice must be adhered to.

The level of integrity offered by the Optidrive control input functions – for example stop/start, forward/reverse and maximum speed, is not sufficient for use in safety-critical applications without independent channels of protection. All applications where malfunction could cause injury or loss of life must be subject to a risk assessment and further protection provided where needed.

The driven motor can start at power up if the enable input signal is present.

The STOP function does not remove potentially lethal high voltages. ISOLATE the drive and wait 10 minutes before starting any work on it. Never carry out any work on the Drive, Motor or Motor cable whilst the input power is still applied.

The Optidrive can be programmed to operate the driven motor at speeds above or below the speed achieved when connecting the motor directly to the mains supply. Obtain confirmation from the manufacturers of the motor and the driven machine about suitability for operation over the intended speed range prior to machine start up.

Do not activate the automatic fault reset function on any systems whereby this may cause a potentially dangerous situation.

IP55 and IP66 drives provide their own pollution degree 2 environments. IP20 drives must be installed in a pollution degree 2 environment, mounted in a cabinet with IP54 or better.

Optidrives are intended for indoor use only.

When mounting the drive, ensure that sufficient cooling is provided. Do not carry out drilling operations with the drive in place, dust and swarf from drilling may lead to damage.

The entry of conductive or flammable foreign bodies should be prevented. Flammable material should not be placed close to the drive.

Relative humidity must be less than 95% (non-condensing).

Ensure that the supply voltage, frequency and no. of phases (1 or 3 phase) correspond to the rating of the Optidrive as delivered.

Never connect the mains power supply to the Output terminals U, V, W.

Do not install any type of automatic switchgear between the drive and the motor.

Wherever control cabling is close to power cabling, maintain a minimum separation of 100 mm and arrange crossings at 90 degrees.

Ensure that all terminals are tightened to the appropriate torque setting.

Do not attempt to carry out any repair of the Optidrive. In the case of suspected fault or malfunction, contact your local Invertek Drives Sales Partner for further assistance.

Do not operate the drive with any of the enclosure covers removed.

1.2. Quick Start Process

Step	Action	See Section	Page
1	Identify the Model Type and ratings of your drive from the model code on the label. In particular: - Check the voltage rating suits the incoming supply - Check the output current capacity meets or exceeds the full load current for the intended motor - Check the enclosure type is suitable for the intended mounting location.	2.1. Identifying the Drive by Model Number 2.3. Understanding the Rating Label 2.4. Drive Model Numbers – IP20 2.5. Drive Model Numbers – IP55 2.6. Drive Model Numbers – IP66 Non-switched 3.1. General	6 7 7 9 10 12
2	Unpack and check the drive. Notify the supplier and shipper immediately of any damage.		
3	Ensure correct ambient and environmental conditions for the drive are met by the proposed mounting location.	10.1. Environmental	78
4	Install the drive in a suitable cabinet (IP20 Units), ensuring suitable cooling air is available. Mount the drive to the wall or machine (IP55 & IP66).	3.1. General 3.2. Before Installation 3.5. Mechanical Dimensions and Weight 3.6. Guidelines for Enclosure Mounting (IP20 Units) 3.7. Mounting the Drive – IP20 Units 3.9. Guidelines for Mounting (IP55 Units) 3.10. Guidelines for Mounting (IP66 Units)	12 12 13 16 17 18 19
5	Select the correct power and motor cables according to local wiring regulations or code, noting the maximum permissible sizes.	10.2. Input/Output Power and Current Ratings	78
6	For IT Supply network, or any power supply type where the phase – earth voltage may exceed the phase – phase voltage (such as ungrounded supplies), disconnect the EMC filter before connecting the supply.	10.6. Internal EMC Filter and Varistors – Disconnection Procedure	83
7	Check the supply cable and motor cable for faults or short circuits.		
8	Route the cables		
9	Check that the intended motor is suitable for use, noting any precautions recommended by the supplier or manufacturer.	4.6. Motor Connection 8.3. Parameter Group 4 – High Performance Motor Control	28 59
10	Check the motor terminal box for correct Star or Delta configuration where applicable.	4.7. Motor Terminal Box Connections	28
11	Ensure correct wiring protection is providing, by installing a suitable circuit breaker or fuses in the incoming supply line.	4.3.4. Fuse / Circuit Breaker Selection	27
12	Connect the power cables, especially ensuring the protective earth connection is made.	4.1. Connection Diagram	24
13	Connect the control cables as required for the application.	4.10. Control Terminal Connections	31
14	Thoroughly check the installation and wiring.		
15	Commission the drive parameters.	5.4. Changing Parameters 6. Parameters	41 43

2. General Information and Ratings

2.1. Identifying the Drive by Model Number

The model number of each Optidrive P2 is constructed according to the following system:

ODP - 2 - 2 4 400 - 3 K F 4 2 - M N

- ODP: Product Family
- 2: Generation
- 2: Frame Size
- 400: Voltage Code
  - 2 : 230 Volt
  - 4 : 400 Volt
  - 5 : 525 Volt
  - 6 : 600 Volt
- 3: Three Digit Power Rating
- K: Input Phases
- F: Power Type
  - K : kW Rated
  - H : HP Rated
- 4: EMC Filter
  - 0 : No Internal Filer
  - F : Internal EMC Filter
- 2: Brake Chopper
  - 4 : Internal Brake Chopper
- M: Enclosure
  - 2 : IP20
  - N : IP55 Non-Switched
  - A : IP66 Outdoor Non-Switched
  - B : IP66 Outdoor Switched
- N: Display
  - M: TFT display
- N: PCB Coating
  - N : Standard Localised Coating

2.2. Product Rating Label Location

All Optidrive P2 models carry a rating label, which can be located as follows:

IP20 Models

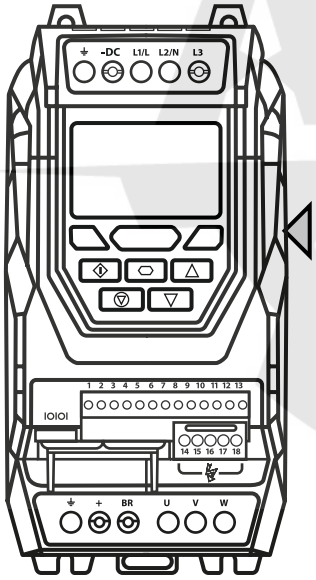

On right hand side when viewed from the front.

IP55 Models

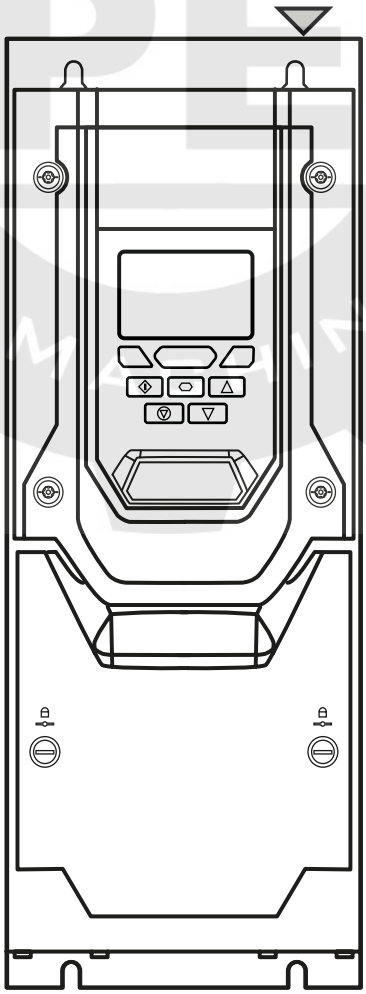

On the top surface.

IP66 Models

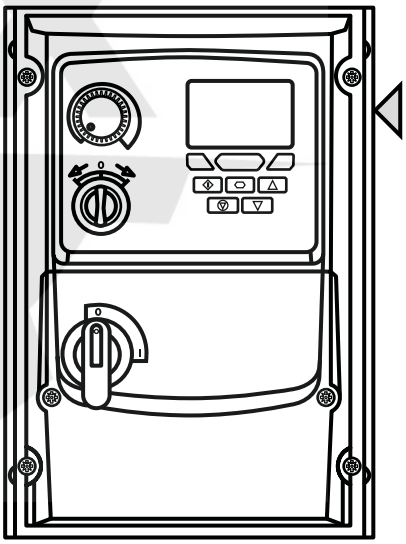

On right hand side when viewed from the front.

2.3. Understanding the Rating Label

The product rating label provides the following information.

	Key
1	Model Code
2	Enclosure Type and IP Rating
3	Firmware Version
4	Serial Number
5	Technical Data – Supply Voltage
6	Technical Data – Maximum continuous output current

2.4. Drive Model Numbers – IP20

Mechanical Dimensions and Mounting information are shown in section *3.5.1. IP20 Units on page 13.*

Electrical Specifications are shown in section *10.2. Input/Output Power and Current Ratings on page 78.*

200-240V ±10% - 1 Phase Input					
kW Model	**kW**	**HP Model**	**HP**	**Output Current (A)**	**Frame Size**
ODP-2-22075-1KF42-MN	0.75	ODP-2-22010-1HF42-MN	1	4.3	2
ODP-2-22150-1KF42-MN	1.5	ODP-2-22020-1HF42-MN	2	7	2
ODP-2-22220-1KF42-MN	2.2	ODP-2-22030-1HF42-MN	3	10.5	2
200-240V ±10% - 3 Phase Input					
kW Model	**kW**	**HP Model**	**HP**	**Output Current (A)**	**Frame Size**
ODP-2-22075-3KF42-MN	0.75	ODP-2-22010-3HF42-MN	1	4.3	2
ODP-2-22150-3KF42-MN	1.5	ODP-2-22020-3HF42-MN	2	7	2
ODP-2-22220-3KF42-MN	2.2	ODP-2-22030-3HF42-MN	3	10.5	2
ODP-2-32040-3KF42-MN	4	ODP-2-32050-3HF42-MN	5	18	3
ODP-2-32055-3KF42-MN	5.5	ODP-2-32075-3HF42-MN	7.5	24	3
ODP-2-42075-3KF42-MN	7.5	ODP-2-42100-3HF42-MN	10	30	4
ODP-2-42110-3KF42-MN	11	ODP-2-42150-3HF42-MN	15	46	4
ODP-2-52150-3KF42-MN	15	ODP-2-52020-3HF42-MN	20	61	5
ODP-2-52185-3KF42-MN	18.5	ODP-2-52025-3HF42-MN	25	72	5
ODP-2-62022-3KF42-MN	22	ODP-2-62030-3HF42-MN	30	90	6A
ODP-2-62030-3KF42-MN	30	ODP-2-62040-3HF42-MN	40	110	6A
ODP-2-62037-3KF42-MN	37	ODP-2-62050-3HF42-MN	50	150	6B
ODP-2-62045-3KF42-MN	45	ODP-2-62060-3HF42-MN	60	180	6B
ODP-2-62055-3KF42-MN	55	ODP-2-62075-3HF42-MN	75	202	6B

380-480V ±10% - 3 Phase Input					
kW Model	**kW**	**HP Model**	**HP**	**Output Current (A)**	**Frame Size**
ODP-2-24075-3KF42-MN	0.75	ODP-2-24010-3HF42-MN	1	2.2	2
ODP-2-24150-3KF42-MN	1.5	ODP-2-24020-3HF42-MN	2	4.1	2
ODP-2-24220-3KF42-MN	2.2	ODP-2-24030-3HF42-MN	3	5.8	2
ODP-2-24400-3KF42-MN	4	ODP-2-24050-3HF42-MN	5	9.5	2
ODP-2-34055-3KF42-MN	5.5	ODP-2-34075-3HF42-MN	7.5	14	3
ODP-2-34075-3KF42-MN	7.5	ODP-2-34100-3HF42-MN	10	18	3
ODP-2-34110-3KF42-MN	11	ODP-2-34150-3HF42-MN	15	24	3
ODP-2-44150-3KF42-MN	15	ODP-2-44200-3HF42-MN	20	30	4
ODP-2-44185-3KF42-MN	18.5	ODP-2-44250-3HF42-MN	25	39	4
ODP-2-44220-3KF42-MN	22	ODP-2-44300-3HF42-MN	30	46	4
ODP-2-54300-3KF42-MN	30	ODP-2-54040-3HF42-MN	40	61	5
ODP-2-54370-3KF42-MN	37	ODP-2-54050-3HF42-MN	50	72	5
ODP-2-64045-3KF42-MN	45	ODP-2-64060-3HF42-MN	60	90	6A
ODP-2-64055-3KF42-MN	55	ODP-2-64075-3HF42-MN	75	110	6A
ODP-2-64075-3KF42-MN	75	ODP-2-64120-3HF42-MN	120	150	6B
ODP-2-64090-3KF42-MN	90	ODP-2-64150-3HF42-MN	150	180	6B
ODP-2-64110-3KF42-MN	110	ODP-2-64175-3HF42-MN	175	202	6B
ODP-2-84200-3K#42-MN	200	ODP-2-84300-3H#42-MN	300	370	8
ODP-2-84250-3K#42-MN	250	ODP-2-84400-3H#42-MN	400	480	8
500-600V ±10% - 3 Phase Input					
kW Model	**kW**	**HP Model**	**HP**	**Output Current (A)**	**Frame Size**
ODP-2-26075-3K042-MN	0.75	ODP-2-26010-3H042-MN	1	2.1	2
ODP-2-26150-3K042-MN	1.5	ODP-2-26020-3H042-MN	2	3.1	2
ODP-2-26220-3K042-MN	2.2	ODP-2-26030-3H042-MN	3	4.1	2
ODP-2-26400-3K042-MN	4	ODP-2-26050-3H042-MN	5	6.5	2
ODP-2-26550-3K042-MN	5.5	ODP-2-26075-3H042-MN	7.5	9	2
ODP-2-36075-3K042-MN	7.5	ODP-2-36100-3H042-MN	10	12	3
ODP-2-36110-3K042-MN	11	ODP-2-36150-3H042-MN	15	17	3
ODP-2-36150-3K042-MN	15	ODP-2-36200-3H042-MN	20	22	3
ODP-2-46185-3K042-MN	18.5	ODP-2-46250-3H042-MN	25	28	4
ODP-2-46220-3K042-MN	22	ODP-2-46300-3H042-MN	30	34	4
ODP-2-46300-3K042-MN	30	ODP-2-46400-3H042-MN	40	43	4
ODP-2-56370-3K042-MN	37	ODP-2-56050-3H042-MN	50	54	5
ODP-2-56045-3K042-MN	45	ODP-2-56060-3H042-MN	60	65	5
ODP-2-66055-3K042-MN	55	ODP-2-66075-3H042-MN	75	78	6A
ODP-2-66075-3K042-MN	75	ODP-2-66100-3H042-MN	100	105	6A
ODP-2-66090-3K042-MN	90	ODP-2-66125-3H042-MN	125	130	6B
ODP-2-66110-3K042-MN	110	ODP-2-66150-3H042-MN	150	150	6B

NOTE

can be replaced with one of the following :

F: Standard EMC filter

R: High performance EMC filter

2.5. Drive Model Numbers – IP55

Mechanical dimensions and mounting information are shown from section *3.5.2. IP55 Units on page 14.*
Electrical specifications are shown in section *10.2. Input/Output Power and Current Ratings on page 78.*

200-240V ±10% - 3 Phase Input					
kW Model Number	**kW**	**HP Model Number**	**HP**	**Output Current (A)**	**Frame Size**
ODP-2-42055-3KF4N-MN	5.5	ODP-2-42075-3HF4N-MN	7.5	24	4
ODP-2-42075-3KF4N-MN	7.5	ODP-2-42100-3HF4N-MN	10	30	4
ODP-2-42110-3KF4N-MN	11	ODP-2-42150-3HF4N-MN	15	46	4
ODP-2-52150-3KF4N-MN	15	ODP-2-52020-3HF4N-MN	20	61	5
ODP-2-52185-3KF4N-MN	18.5	ODP-2-52025-3HF4N-MN	25	72	5
ODP-2-62022-3KF4N-MN	22	ODP-2-62030-3HF4N-MN	30	90	6
ODP-2-62030-3KF4N-MN	30	ODP-2-62040-3HF4N-MN	40	110	6
ODP-2-62037-3KF4N-MN	37	ODP-2-62050-3HF4N-MN	50	150	6
ODP-2-62045-3KF4N-MN	45	ODP-2-62060-3HF4N-MN	60	180	6
ODP-2-72055-3KF4N-MN	55	ODP-2-72075-3HF4N-MN	75	202	7
ODP-2-72075-3KF4N-MN	75	ODP-2-72100-3HF4N-MN	100	248	7
380-480V ±10% - 3 Phase Input					
kW Model Number	**kW**	**HP Model Number**	**HP**	**Output Current (A)**	**Frame Size**
ODP-2-44110-3KF4N-MN	11	ODP-2-44150-3HF4N-MN	15	24	4
ODP-2-44150-3KF4N-MN	15	ODP-2-44200-3HF4N-MN	20	30	4
ODP-2-44185-3KF4N-MN	18.5	ODP-2-44250-3HF4N-MN	25	39	4
ODP-2-44220-3KF4N-MN	22	ODP-2-44300-3HF4N-MN	30	46	4
ODP-2-54300-3KF4N-MN	30	ODP-2-54040-3HF4N-MN	40	61	5
ODP-2-54370-3KF4N-MN	37	ODP-2-54050-3HF4N-MN	50	72	5
ODP-2-64045-3KF4N-MN	45	ODP-2-64060-3HF4N-MN	60	90	6
ODP-2-64055-3KF4N-MN	55	ODP-2-64075-3HF4N-MN	75	110	6
ODP-2-64075-3KF4N-MN	75	ODP-2-64120-3HF4N-MN	120	150	6
ODP-2-64090-3KF4N-MN	90	ODP-2-64150-3HF4N-MN	150	180	6
ODP-2-74110-3KF4N-MN	110	ODP-2-74175-3HF4N-MN	175	202	7
ODP-2-74132-3KF4N-MN	132	ODP-2-74200-3HF4N-MN	200	240	7
ODP-2-74160-3KF4N-MN	160	ODP-2-74250-3HF4N-MN	250	302	7
ODP-2-84200-3K#4N-MN	200	ODP-2-84300-3H#4N-MN	300	370	8
ODP-2-84250-3K#4N-MN	250	ODP-2-84400-3H#4N-MN	400	480	8
480-525V ±10% - 3 Phase Input					
kW Model Number	**kW**	**HP Model Number**	**HP**	**Output Current (A)**	**Frame Size**
ODP-2-75132-3K04N-MN	132		175	185	7
ODP-2-75150-3K04N-MN	150		200	205	7
ODP-2-75185-3K04N-MN	185		250	255	7
ODP-2-75200-3K04N-MN	200		270	275	7
500-600V ±10% - 3 Phase Input					
kW Model Number	**kW**	**HP Model Number**	**HP**	**Output Current (A)**	**Frame Size**
ODP-2-46150-3K04N-MN	15	ODP-2-46200-3H04N-MN	20	22	4
ODP-2-46185-3K04N-MN	18.5	ODP-2-46250-3H04N-MN	25	28	4
ODP-2-46220-3K04N-MN	22	ODP-2-46300-3H04N-MN	30	34	4
ODP-2-46300-3K04N-MN	30	ODP-2-46400-3H04N-MN	40	43	4
ODP-2-56370-3K04N-MN	37	ODP-2-56050-3H04N-MN	50	54	5
ODP-2-56450-3K04N-MN	45	ODP-2-56060-3H04N-MN	60	65	5
ODP-2-66055-3K04N-MN	55	ODP-2-66075-3H04N-MN	75	78	6
ODP-2-66075-3K04N-MN	75	ODP-2-66100-3H04N-MN	100	105	6
ODP-2-66090-3K04N-MN	90	ODP-2-66125-3H04N-MN	125	130	6
ODP-2-66110-3K04N-MN	110	ODP-2-66150-3H04N-MN	150	150	6

NOTE

* can be replaced with one of the following:

F: Standard EMC filter R: High performance EMC filter

2.6. Drive Model Numbers – IP66 Non-switched

Mechanical dimensions and mounting information are shown from section *3.5.3. IP66 Units on page 15.*
Electrical specifications are shown in section *10.2. Input/Output Power and Current Ratings on page 78.*

200-240V ±10% - 1 Phase Input					
kW Model Number	**kW**	**HP Model Number**	**HP**	**Output Current (A)**	**Frame Size**
ODP-2-22075-1KF4A-MN	1	ODP-2-22010-1HF4A-MN	1	4.3	2
ODP-2-22150-1KF4A-MN	2	ODP-2-22020-1HF4A-MN	2	7	2
ODP-2-22220-1KF4A-MN	3	ODP-2-22030-1HF4A-MN	3	10.5	2
ODP-2-32040-1KF4A-MN	4	ODP-2-32050-1HF4A-MN	5	15.3	3
ODP-2-42055-1K04A-MN	5.5	ODP-2-42075-1H04A-MN	7.5	24	4
ODP-2-42075-1K04A-MN	7.5	ODP-2-42100-1H04A-MN	10	30	4
200-240V ±10% - 3 Phase Input					
kW Model Number	**kW**	**HP Model Number**	**HP**	**Output Current (A)**	**Frame Size**
ODP-2-22075-3KF4A-MN	0.75	ODP-2-22010-3HF4A-MN	1	4.3	2
ODP-2-22150-3KF4A-MN	1.5	ODP-2-22020-3HF4A-MN	2	7	2
ODP-2-22220-3KF4A-MN	2.2	ODP-2-22030-3HF4A-MN	3	10.5	2
ODP-2-32040-3KF4A-MN	4	ODP-2-32050-3HF4A-MN	5	18	3
ODP-2-32055-3KF4A-MN	5.5	ODP-2-32075-3HF4A-MN	7.5	24	3
ODP-2-42075-3KF4A-MN	7.5	ODP-2-42100-3HF4A-MN	10	30	4
ODP-2-42110-3KF4A-MN	11	ODP-2-42150-3HF4A-MN	15	46	4
380-480V ±10% - 3 Phase Input					
kW Model Number	**kW**	**HP Model Number**	**HP**	**Output Current (A)**	**Frame Size**
ODP-2-24075-3KF4A-MN	0.75	ODP-2-24010-3HF4A-MN	1	2.2	2
ODP-2-24150-3KF4A-MN	1.5	ODP-2-24020-3HF4A-MN	2	4.1	2
ODP-2-24220-3KF4A-MN	2.2	ODP-2-24030-3HF4A-MN	3	5.8	2
ODP-2-24400-3KF4A-MN	4	ODP-2-24050-3HF4A-MN	5	9.5	2
ODP-2-34055-3KF4A-MN	5.5	ODP-2-34075-3HF4A-MN	7.5	14	3
ODP-2-34075-3KF4A-MN	7.5	ODP-2-34100-3HF4A-MN	10	18	3
ODP-2-34110-3KF4A-MN	11	ODP-2-34150-3HF4A-MN	15	24	3
ODP-2-44150-3KF4A-MN	15	ODP-2-44200-3HF4A-MN	20	30	4
ODP-2-44185-3KF4A-MN	18.5	ODP-2-44250-3HF4A-MN	25	39	4
ODP-2-44220-3KF4A-MN	22	ODP-2-44300-3HF4A-MN	30	46	4
500-600V ±10% - 3 Phase Input					
kW Model Number	**kW**	**HP Model Number**	**HP**	**Output Current (A)**	**Frame Size**
ODP-2-26075-3K04A-MN	0.75	ODP-2-26010-3H04A-MN	1	2.1	2
ODP-2-26150-3K04A-MN	1.5	ODP-2-26020-3H04A-MN	2	3.1	2
ODP-2-26220-3K04A-MN	2.2	ODP-2-26030-3H04A-MN	3	4.1	2
ODP-2-26400-3K04A-MN	4	ODP-2-26050-3H04A-MN	5	6.5	2
ODP-2-26550-3K04A-MN	5.5	ODP-2-26075-3H04A-MN	7.5	9	2
ODP-2-36075-3K04A-MN	7.5	ODP-2-36100-3H04A-MN	10	12	3
ODP-2-36110-3K04A-MN	11	ODP-2-36150-3H04A-MN	15	17	3
ODP-2-36150-3K04A-MN	15	ODP-2-36200-3H04A-MN	20	22	3
ODP-2-46185-3KF4A-MN	18.5	ODP-2-46250-3HF4A-MN	25	28	4
ODP-2-46220-3KF4A-MN	22	ODP-2-46300-3HF4A-MN	30	34	4
ODP-2-46300-3KF4A-MN	30	ODP-2-46400-3HF4A-MN	40	43	4

2.7. Drive Model Numbers – IP66 Switched

Mechanical dimensions and mounting information are shown from section *3.5.3. IP66 Units on page 15.*
Electrical specifications are shown in section *10.2. Input/Output Power and Current Ratings on page 78.*

200-240V ±10% - 1 Phase Input					
kW Model Number	**kW**	**HP Model Number**	**HP**	**Output Current (A)**	**Frame Size**
ODP-2-22075-1KF4B-MN	1	ODP-2-22010-1HF4B-MN	1	4.3	2
ODP-2-22150-1KF4B-MN	2	ODP-2-22020-1HF4B-MN	2	7	2
ODP-2-22220-1KF4B-MN	3	ODP-2-22030-1HF4B-MN	3	10.5	2
ODP-2-32040-1KF4B-MN	4	ODP-2-32050-1HF4B-MN	5	15.3	3
ODP-2-42055-1K04B-MN	5.5	ODP-2-42075-1H04B-MN	7.5	24	4
ODP-2-42075-1K04B-MN	7.5	ODP-2-42100-1H04B-MN	10	30	4
200-240V ±10% - 3 Phase Input					
kW Model Number	**kW**	**HP Model Number**	**HP**	**Output Current (A)**	**Frame Size**
ODP-2-22075-3KF4B-MN	0.75	ODP-2-22010-3HF4B-MN	1	4.3	2
ODP-2-22150-3KF4B-MN	1.5	ODP-2-22020-3HF4B-MN	2	7	2
ODP-2-22220-3KF4B-MN	2.2	ODP-2-22030-3HF4B-MN	3	10.5	2
ODP-2-32040-3KF4B-MN	4	ODP-2-32050-3HF4B-MN	5	18	3
ODP-2-32055-3KF4B-MN	5.5	ODP-2-32075-3HF4B-MN	7.5	24	3
ODP-2-42075-3KF4B-MN	7.5	ODP-2-42100-3HF4B-MN	10	30	4
ODP-2-42110-3KF4B-MN	11	ODP-2-42150-3HF4B-MN	15	46	4
380-480V ±10% - 3 Phase Input					
kW Model Number	**kW**	**HP Model Number**	**HP**	**Output Current (A)**	**Frame Size**
ODP-2-24075-3KF4B-MN	0.75	ODP-2-24010-3HF4B-MN	1	2.2	2
ODP-2-24150-3KF4B-MN	1.5	ODP-2-24020-3HF4B-MN	2	4.1	2
ODP-2-24220-3KF4B-MN	2.2	ODP-2-24030-3HF4B-MN	3	5.8	2
ODP-2-24400-3KF4B-MN	4	ODP-2-24050-3HF4B-MN	5	9.5	2
ODP-2-34055-3KF4B-MN	5.5	ODP-2-34075-3HF4B-MN	7.5	14	3
ODP-2-34075-3KF4B-MN	7.5	ODP-2-34100-3HF4B-MN	10	18	3
ODP-2-34110-3KF4B-MN	11	ODP-2-34150-3HF4B-MN	15	24	3
ODP-2-44150-3KF4B-MN	15	ODP-2-44200-3HF4B-MN	20	30	4
ODP-2-44185-3KF4B-MN	18.5	ODP-2-44250-3HF4B-MN	25	39	4
ODP-2-44220-3KF4B-MN	22	ODP-2-44300-3HF4B-MN	30	46	4
500-600V ±10% - 3 Phase Input					
kW Model Number	**kW**	**HP Model Number**	**HP**	**Output Current (A)**	**Frame Size**
ODP-2-26075-3K04B-MN	0.75	ODP-2-26010-3H04B-MN	1	2.1	2
ODP-2-26150-3K04B-MN	1.5	ODP-2-26020-3H04B-MN	2	3.1	2
ODP-2-26220-3K04B-MN	2.2	ODP-2-26030-3H04B-MN	3	4.1	2
ODP-2-26400-3K04B-MN	4	ODP-2-26050-3H04B-MN	5	6.5	2
ODP-2-26550-3K04B-MN	5.5	ODP-2-26075-3H04B-MN	7.5	9	2
ODP-2-36075-3K04B-MN	7.5	ODP-2-36100-3H04B-MN	10	12	3
ODP-2-36110-3K04B-MN	11	ODP-2-36150-3H04B-MN	15	17	3
ODP-2-36150-3K04B-MN	15	ODP-2-36200-3H04B-MN	20	22	3
ODP-2-46185-3KF4B-MN	18.5	ODP-2-46250-3HF4B-MN	25	28	4
ODP-2-46220-3KF4B-MN	22	ODP-2-46300-3HF4B-MN	30	34	4
ODP-2-46300-3KF4B-MN	30	ODP-2-46400-3HF4B-MN	40	43	4

3. Mechanical Installation

3.1. General

- The Optidrive should be mounted in a vertical position only, on a flat, flame resistant, vibration free mounting using the integral mounting holes or DIN Rail clip (Frame Size 2 only).
- Do not mount flammable material close to the Optidrive.
- Ensure that the minimum cooling air gaps, as detailed in sections *3.6. Guidelines for Enclosure Mounting (IP20 Units) on page 16, 3.9. Guidelines for Mounting (IP55 Units) on page 18* and *3.10. Guidelines for Mounting (IP66 Units) on page 19* are left clear.
- Ensure that the ambient temperature range does not exceed the permissible limits for the Optidrive given in section *10.1. Environmental on page 78*.
- Provide suitable clean, moisture and contaminant free cooling air sufficient to fulfil the cooling requirements of the Optidrive.

3.2. Before Installation

- Carefully Unpack the Optidrive and check for any signs of damage. Notify the shipper immediately if any exist.
- Check the drive rating label to ensure it is of the correct type and power requirements for the application.
- To prevent accidental damage always store the Optidrive in its original box until required. Storage should be clean and dry and within the temperature range –40°C to +60°C.

3.3. UL Compliant Installation

Note the following for UL-compliant installation:

- For an up to date list of UL compliant products, please refer to UL listing NMMS.E226333.
- The drive can be operated within an ambient temperature range as stated in section *10.1. Environmental on page 78*.
- For IP20 units, installation is required in a pollution degree 1 environment.
- For IP55 units, installation in a pollution degree 2 environment is permissible.
- For IP66 units, installation in a pollution degree 4 environment is permissible.
- UL Listed ring terminals / lugs must be used for all bus bar and grounding connections.

Refer to section *10.4. Additional Information for UL Approved Installations on page 81*.

3.4. Installation Following a Period of Storage

Where the drive has been stored for some time prior to installation, or has remained without the main power supply present for an extended period of time, it is necessary to reform the DC capacitors within the drive according to the following table before operation. For drives which have not been connected to the main power supply for a period of more than 2 years, this requires a reduced mains voltage mains voltage to be applied for a time period, and gradually increased prior to operating the drive. The voltage levels relative to the drive rated voltage, and the time periods for which they must be applied are shown in the following table. Following completion of the procedure, the drive may be operated as normal.

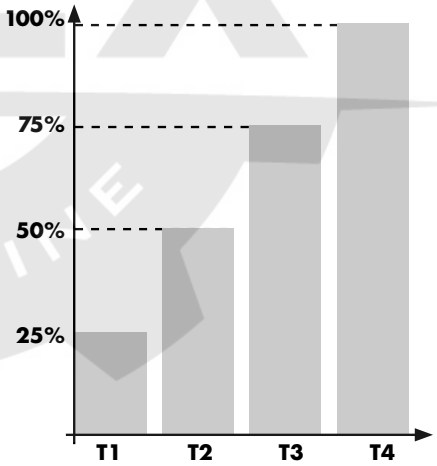

Storage Period /Power-OFF Period	Initial Input Voltage Level	Time Period T1	Secondary Input Voltage Level	Time Period T2	Third Input Voltage Level	Time Period T3	Final Input Voltage Level	Time Period T4
Up to 1 Year	100%	N/A						
1 – 2 Years	100%	1 Hour	N/A					
2 – 3 Years	25%	30 Minutes	50%	30 Minutes	75%	30 Minutes	100%	30 Minutes
More than 3 Years	25%	2 Hours	50%	2 Hours	75%	2 Hours	100%	2 Hours

3.5. Mechanical Dimensions and Weight

3.5.1. IP20 Units

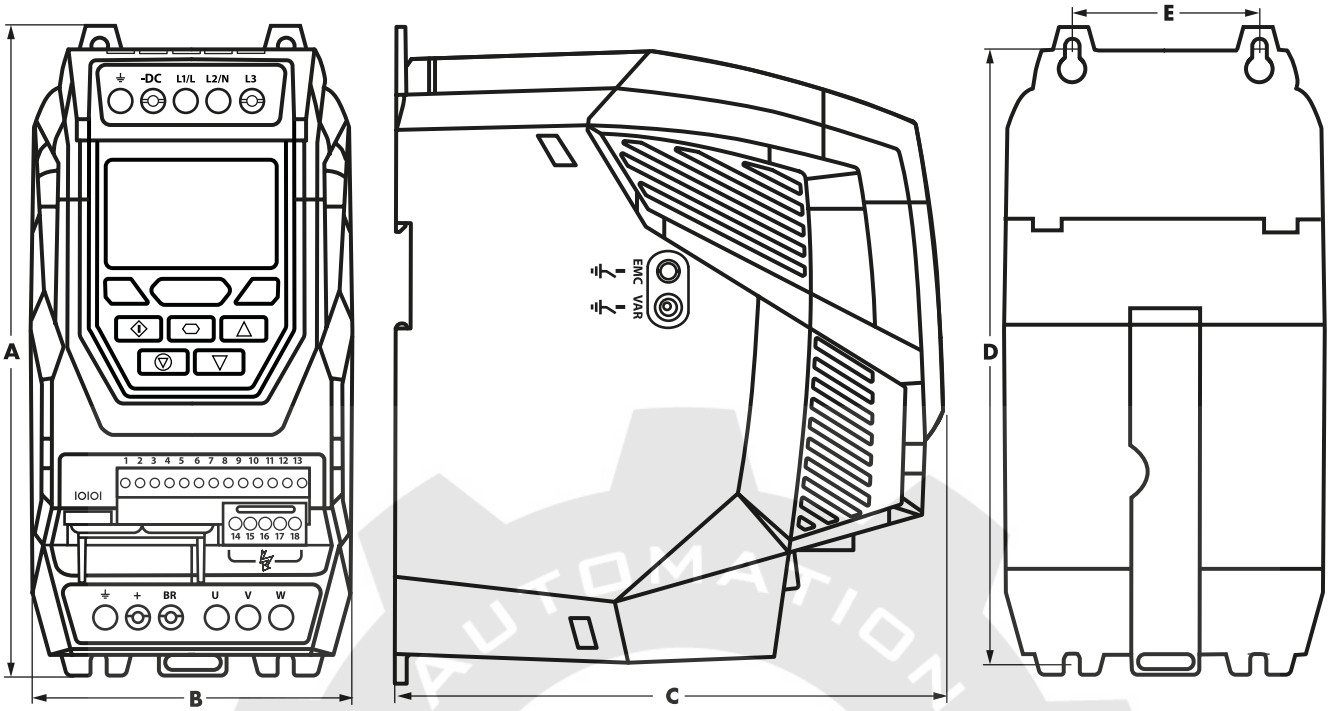

Drive Size	A		B		C		D		E		Weight	
	mm	in	mm	in	mm	in	mm	in	mm	in	Kg	lb
2	221	8.70	110	4.33	185	7.28	209	8.23	63	2.48	1.8	4.0
3	261	10.28	131	5.16	205	8.07	247	9.72	80	3.15	3.5	7.7
4	418	16.46	172	6.77	240	9.45	400	15.75	125	4.92	9.2	20.3
5	486	19.13	233	9.17	260	10.24	460	18.11	175	6.89	18.1	39.9
6A	614	24.17	286	11.25	320	12.59	588	23.14	200	7.87	32	70.5
6B	726	28.58	330	13	320	12.59	692	27.24	225	8.85	43	94.8
8	974	38.34	444	17.48	423	16.65	924	36.37	320	12.59	124.5	274.4

Mounting Bolts		
Frame Size	Metric	UNF
2	M4	#8
3	M4	#8
4	M8	5/16
5	M8	5/16
6A	M8	5/16
6B	M10	3/8
8	M12	7/16

Tightening Torques				
	Frame Size	Required Torque		Terminal Type
Control Terminals	All	0.5 Nm	4.5 lb-in	Rising Clamp
Power Terminals	2 & 3	1 Nm	9 lb-in	Screw Clamp
	4	2 Nm	18 lb-in	Rising Clamp
	5	4 Nm	35.5 lb-in	Rising Clamp
	6A	12 Nm	9 lb-ft	M10 Stud
	6B	15 Nm	11 lb-ft	M10 Stud
	8	60 Nm	42 lb-ft	M12 Stud

NOTE

*The IP20 Frame Size 4 Chassis can obstruct the rotation (tightening) of a bolt or screw with a hex head, a fixing with a round head will be most suitable for the mounting of this unit.

3.5.2. IP55 Units

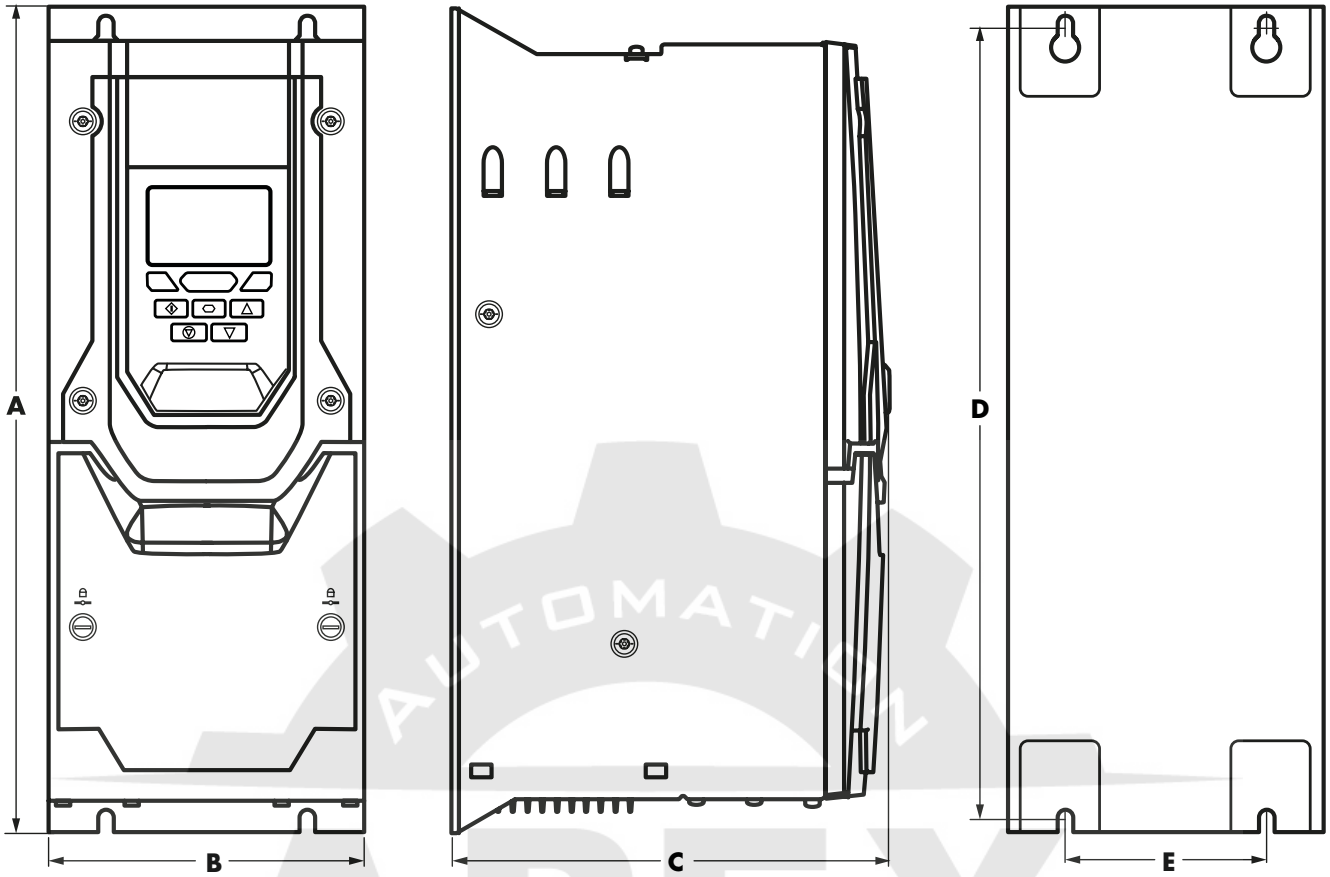

Drive Size	A		B		C		D		E		Weight	
	mm	in	mm	in	mm	in	mm	in	mm	in	kg	lb
4	450	17.72	171	6.73	252	9.92	428	16.85	110	4.33	11.5	25.4
5	540	21.26	235	9.25	270	10.63	520	20.47	175	6.89	23	50.7
6	865	34.06	330	12.99	332	13.07	840	33.07	200	7.87	55	121.2
7	1280	50.39	330	12.99	358	14.09	1255	49.40	200	7.87	89	196.2
8	1334	52.51	444	17.48	423	16.65	924	36.37	320	12.59	TBC	TBC

Mounting Bolts		
Frame Size	Metric	UNF
4	M8	5/16
5	M8	5/16
6	M10	3/8
7	M10	3/8
8	M12	7/16

Tightening Torques				
	Frame Size	Required Torque		Terminal Type
Control Terminals	All	0.5 Nm	4.5 lb-in	Rising Clamp
Power Terminals	4	2 Nm	18 lb-in	Rising Clamp
	5	4 Nm	35.5 lb-in	Rising Clamp
	6	15 Nm	11 lb-ft	M10 Stud
	7	15 Nm	11 lb-ft	M10 Stud
	8	60 Nm	42 lb-ft	M12 Stud

3.5.3. IP66 Units

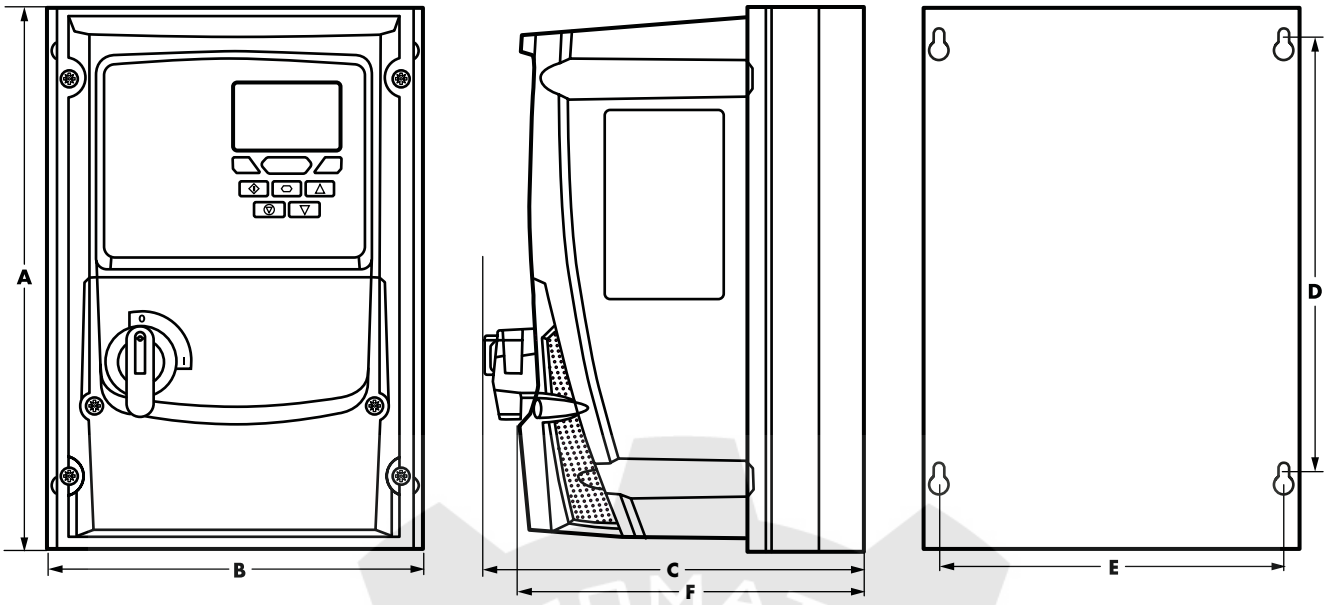

Drive Size	A		B		C		D		E		F		Weight	
	mm	in	mm	in	mm	in	mm	in	mm	in	mm	in	kg	lb
2	257	10.12	188	7.40	182	7.16	200	7.87	176	6.93	172	6.77	3.5	7.7
3	310	12.20	211	8.31	235	9.25	252	9.92	197	7.75	225	8.86	6.6	14.5
4	360	14.17	240	9.45	271	10.67	300	11.81	227	8.94	260	10.24	9.5	20.9

NOTE

Measurement C is only valid for the version with the disconnect.

Mounting Bolts		
Frame Size	Metric	UNF
All Sizes	M4	#8

Tightening Torques				
	Frame Size	Required Torque		Terminal Type
Control Terminals	All	0.5 Nm	4.5lb-in	Rising Clamp
Power Terminals	2 & 3	0.8 Nm	7 lb-in	Rising Clamp
	4	2 Nm	18 lb-in	Rising Clamp

3.6. Guidelines for Enclosure Mounting (IP20 Units)

- IP20 drives are suitable for use in pollution degree 1 environments, according to IEC-664-1. For pollution degree 2 or higher environments, drives should be mounted in a suitable control cabinet with sufficient ingress protection to maintain a pollution degree 1 environment around the drive.
- Enclosures should be made from a thermally conductive material.
- Ensure the minimum air gap clearances around the drive as shown below are observed when mounting the drive.
- Where ventilated enclosures are used, there should be venting above the drive and below the drive to ensure good air circulation. Air should be drawn in below the drive and expelled above the drive.
- In any environments where the conditions require it, the enclosure must be designed to protect the Optidrive against ingress of airborne dust, corrosive gases or liquids, conductive contaminants (such as condensation, carbon dust, and metallic particles) and sprays or splashing water from all directions.
- High moisture, salt or chemical content environments should use a suitably sealed (non-vented) enclosure.

The enclosure design and layout should ensure that the adequate ventilation paths and clearances are left to allow air to circulate through the drive heatsink. Invertek Drives recommend the following minimum sizes for drives mounted in non-ventilated metallic enclosures:

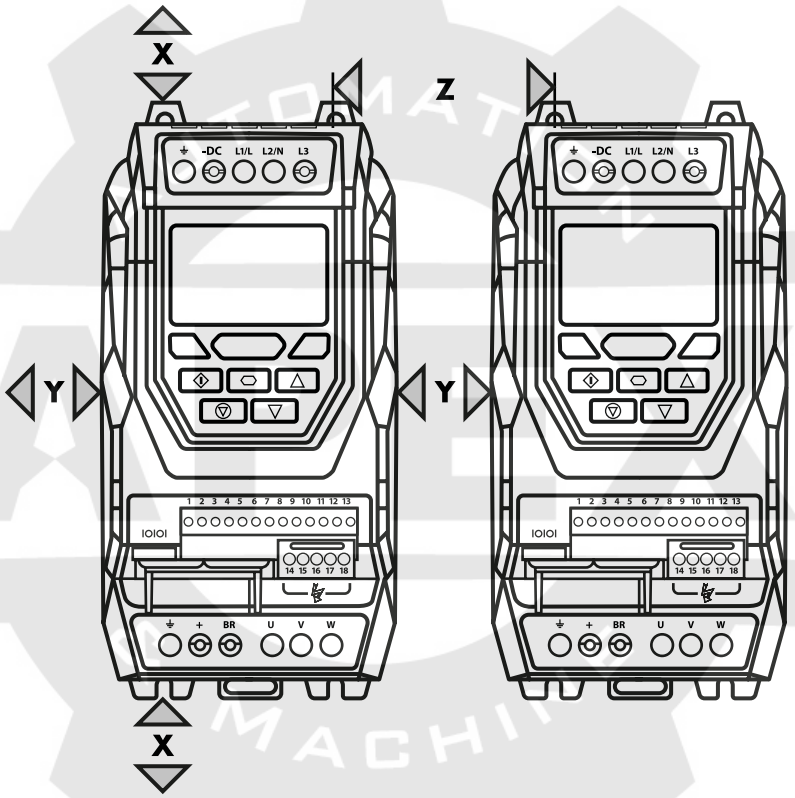

Drive Size	X Above & Below		Y Either Side		Z Between	
	mm	in	mm	in	mm	in
2	75	2.95	10	0.39	46	1.81
3	100	3.94	10	0.39	52	2.05
4	200	7.87	25	0.98	70	2.76
5	200	7.87	25	0.98	70	2.76
6A	200	7.87	25	0.98	70	2.76
6B	200	7.87	25	0.98	70	2.76
8	350	11.81	50	3.94	412	16.22

NOTE

Dimension Z assumes that the drives are mounted side-by-side with no clearance.

Typical drive heat losses are <3% of operating load conditions.

Above are guidelines only and the operating ambient temperature of the drive MUST be maintained at all times.

3.7. Mounting the Drive – IP20 Units

- IP20 Units are intended for installation within a control cabinet.
- When mounting with screws:
  - Using the drive as a template, or the dimensions shown above, mark the locations for drilling.
  - Ensure that when mounting locations are drilled, the dust from drilling does not enter the drive.
  - Mount the drive to the cabinet backplate using suitable mounting screws.
  - Position the drive, and tighten the mounting screws securely.
- When Din Rail Mounting (Frame Size 2 Only):
  - Locate the DIN rail mounting slot on the rear of the drive onto the top of the DIN rail first.
  - Press the bottom of the drive onto the DIN rail until the lower clip attaches to the DIN rail.
  - If necessary, use a suitable flat blade screw driver to pull the DIN rail clip down to allow the drive to mount securely on the rail.
  - To remove the drive from the DIN rail, use a suitable flat blade screwdriver to pull the release tab downwards, and lift the bottom of the drive away from the rail first.

3.8. Drive Enclosure Dimensioning

The IP20 drives are intended to be mounted in suitable enclosures. It is very important to ensure that the enclosure is designed appropriately to keep the drive ambient temperature within acceptable levels.

Calculating the panel size for a completely sealed panel without any ventilation:

The external surface area which is free to radiate heat to the environment must be great enough to dissipate the heat generated inside the panel – If any surface is against a wall or the floor then the corresponding surface area should be excluded from this calculation. The required panel surface area can be calculated according to the following:

- $A = P / K \times (T_{MAX} - T_{AMB})$

Where

- A = Control Panel Surface Area in square metres which is free to radiate heat to the air (areas mounted against the wall or floor are excluded)
- P = Total power dissipated in panel (include all losses from all power devices)
- K = Thermal constant, typically 5.5 for painted mild steel
- T_{MAX} = Maximum temperature allowed in the panel (ambient temperature for the drive)
- T_{AMB} = Maximum ambient temperature around the panel

If the panel is to be ventilated using cooling fans and filters, the required airflow can be determined as follows:

- $F = 0.053 \times P / (T_{MAX} - T_{AMB})$

Where

- F = Airflow in Cubic metres per minute
- P = Total power dissipated in panel (include all losses from all power devices)
- T_{MAX} = Maximum temperature allowed in the panel (ambient temperature for the drive)
- T_{AMB} = Maximum ambient temperature around the panel

3.9. Guidelines for Mounting (IP55 Units)

- Before mounting the drive, ensure that the chosen location meets the environmental condition requirements for the drive shown in section *10.1. Environmental on page 78*.
- The drive must be mounted vertically, on a suitable flat surface.
- The minimum mounting clearances as shown in the table below must be observed.
- The mounting site and chosen mountings should be sufficient to support the weight of the drives.
- IP55 units do not require mounting inside an electrical control cabinet; however they may be if desired.
- Using the drive as a template, or the dimensions shown above, mark the locations required for drilling.
- Suitable cable glands to maintain the IP protection of the drive are required. Gland sizes should be selected based on the number and size of the required connection cables. Drives are supplied with a plain, undrilled gland plate to allow the correct hole sizes to be cut as required. Remove the gland plate from the drive prior to drilling.

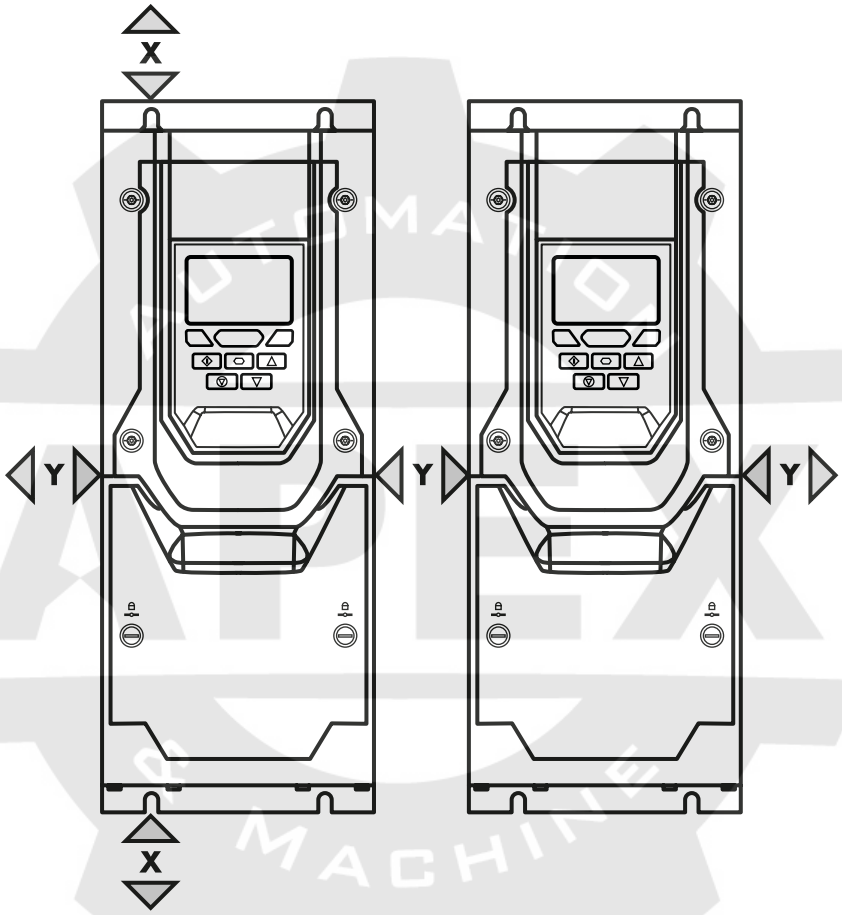

Drive Size	X – Above & Below		Y – Either Side	
	mm	in	mm	in
4	200	7.87	10	0.39
5	200	7.87	10	0.39
6	200	7.87	10	0.39
7	200	7.87	10	0.39
8	350	13.78	50	1.97

NOTE

Typical drive heat losses are approximately 3% of operating load conditions.

Above are guidelines only and the operating ambient temperature of the drive MUST be maintained at all times.

3.10. Guidelines for Mounting (IP66 Units)

- Before mounting the drive, ensure that the chosen location meets the environmental condition requirements for the drive shown in section *10.1. Environmental on page 78*.
- The drive must be mounted vertically, on a suitable flat surface.
- The minimum mounting clearances as shown in the table below must be observed.
- The mounting site and chosen mountings should be sufficient to support the weight of the drives.
- Using the drive as a template, or the dimensions shown below, mark the locations required for drilling.
- Suitable cable glands to maintain the ingress protection of the drive are required. Gland holes for power and motor cables are pre-moulded into the drive enclosure, recommended gland sizes are shown below. Gland holes for control cables may be cut as required.

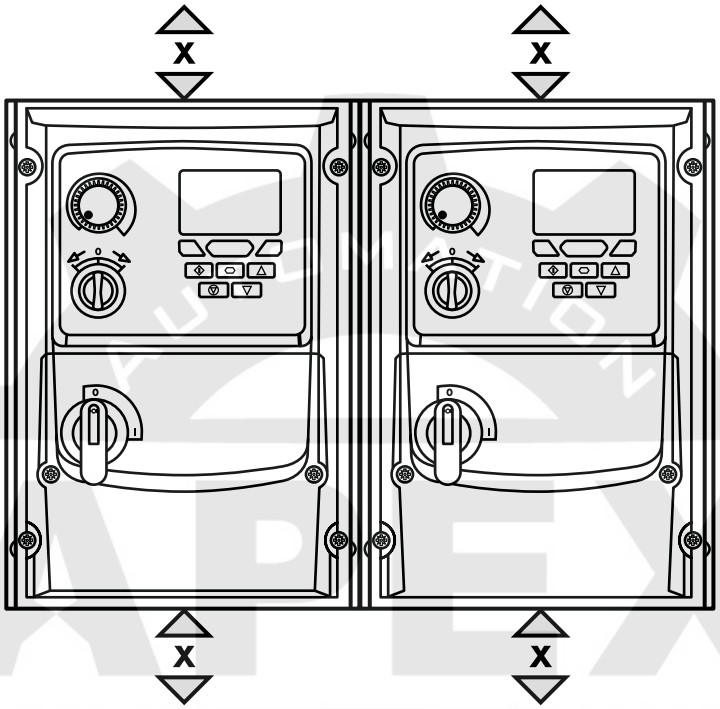

Drive Size	X Above & Below		Cable Gland Sizes			
	mm	in	Frame	Power Cable	Motor Cable	Control Cables
All sizes	200	7.87	All sizes	PG21 (M25)	PG21 (M25)	PG13.5 (M20)

NOTE

Typical drive heat losses are approximately 3% of operating load conditions.

Above are guidelines only and the operating ambient temperature of the drive MUST be maintained at all times.

Alternative metric gland sizes are shown in the brackets.

3.11. Installing the IP66 Sun Shade

Frame Size	Part Number
2	66-ODS2H-9016
3 & 4	66-ODS3H-9016

An IP66 Sun Shade should always be fitted (in accordance with these instructions) where the product is installed outdoors, and there is a possibility for the display of the drive to come into the path of direct sunlight or where there is possibility of snow, ice, or other particles accumulating on the top of the drive.

Recommended clearance before installation

Ensure you have at least 30mm either side and 100mm above the drive to allow sufficient space for installation of the IP66 Sun Shade.

Installing the IP66 Sun Shade

Install the Optidrive following the instructions in the User Guide. Place the IP66 Sun Shade over the Optidrive and slide down until it slots on top of the heat sink, then fix in place using the mounting holes.

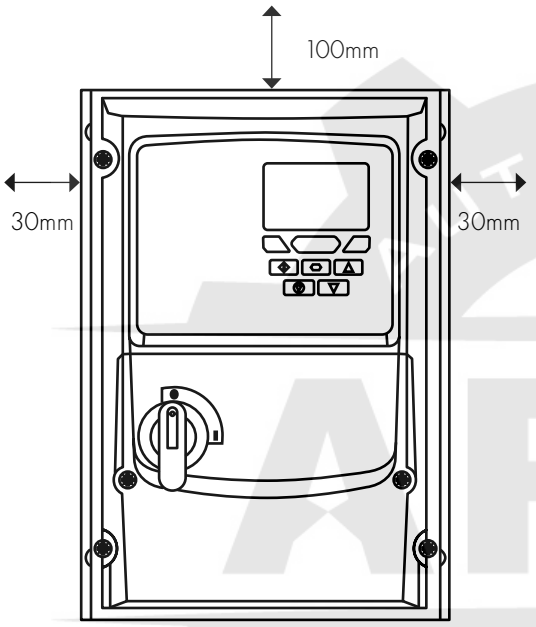

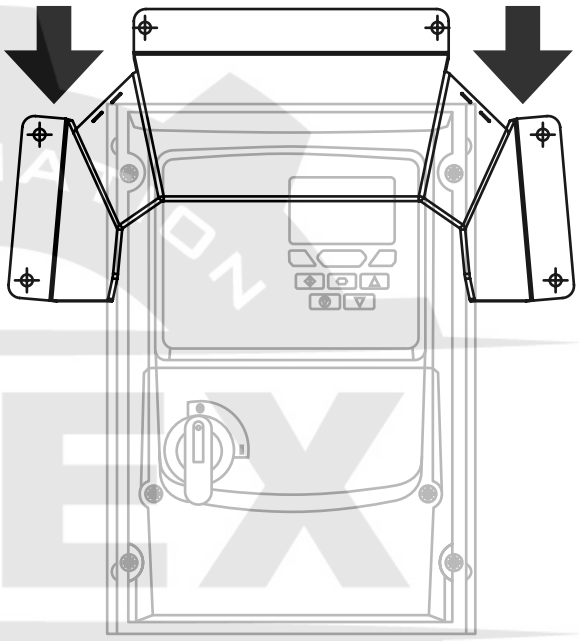

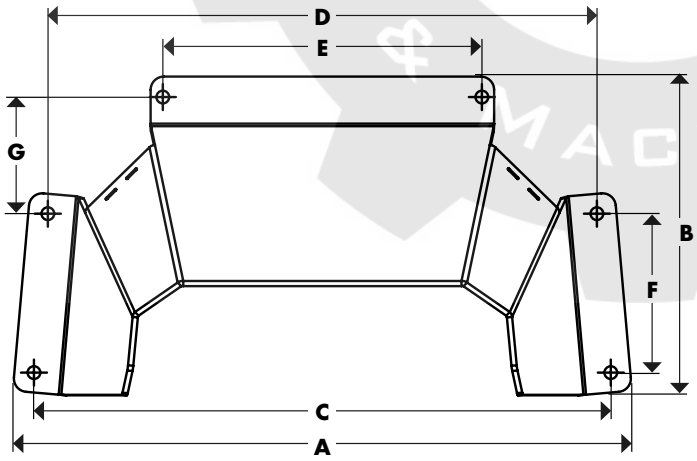

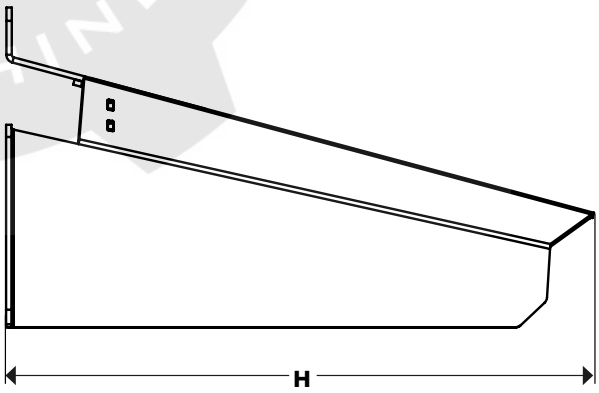

Drive Size	A		B		C		D		E		F		G		H		Hole Size		Weight	
	mm	in	mm	in	mm	in	mm	in	mm	in	mm	in	mm	in	mm	in	mm	in	Kg	lb
2	275.5	10.85	139.7	5.5	259.6	10.22	247.4	9.74	140.0	5.51	69.7	2.74	48.9	1.93	285.0	11.2	4.8	0.19	1.5	3.3
3 & 4	340.7	13.41	169.7	6.68	324.7	12.78	307.3	12.1	180.0	7.09	99.6	3.92	48.9	1.93	355.0	14.0	4.8	0.19	2.5	5.5

3.12. Removing the Terminal Cover

3.12.1. IP55 Frame Size 4

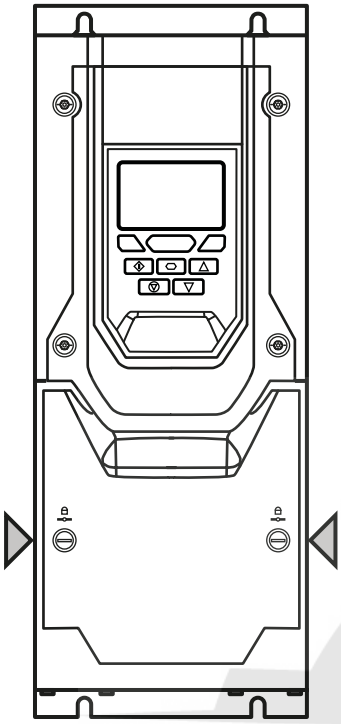

3.12.2. IP55 Frame Size 5

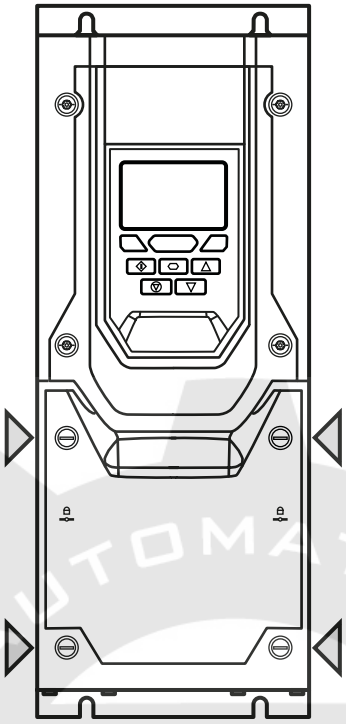

3.12.3. IP55 Frame Sizes 6 & 7

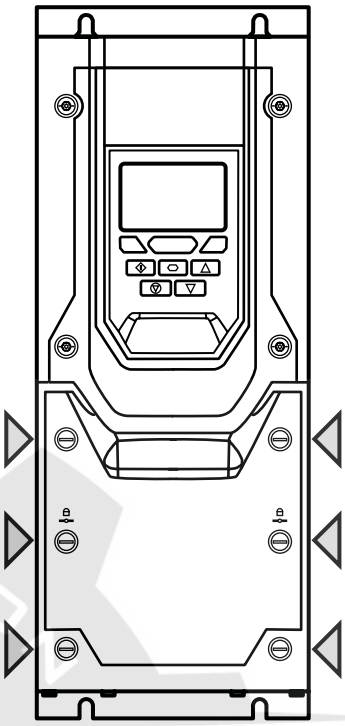

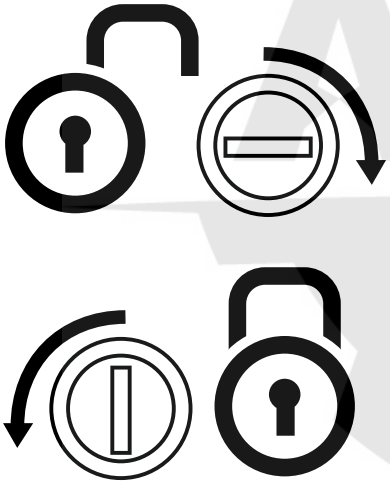

Terminal Cover Release Screws

Using a suitable screwdriver, unscrew the securing screws and remove the cover.

3.12.4. IP20 & IP55 Frame Size 8

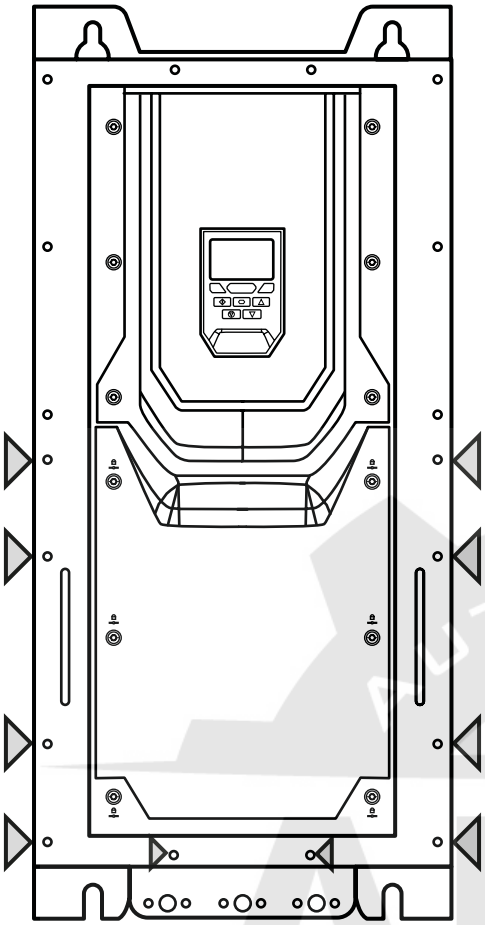

Terminal Cover Release Screws

Using a suitable screwdriver, unscrew the ten securing screws indicated and remove the cover.

3.12.5. IP66 Frame Sizes 2 & 3

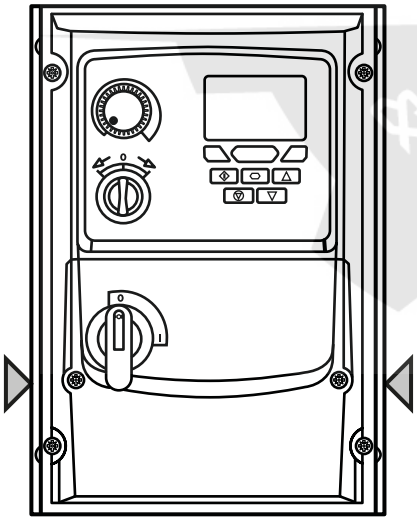

Terminal Cover Release Screws

Remove the front cover by rotating the screws in an anti-clockwise direction.

3.12.6. IP66 Frame Size 4

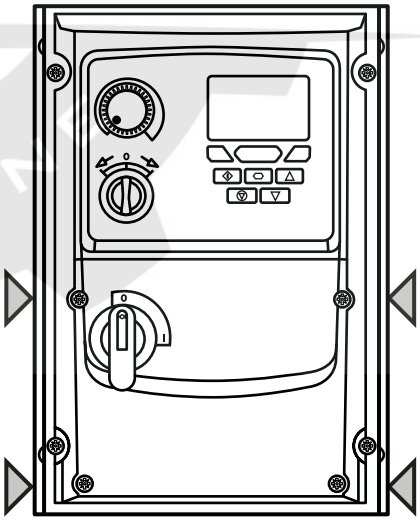

3.13. Routine Maintenance

The drive should be included within the scheduled maintenance program so that the installation maintains a suitable operating environment, this should include:

- Ambient temperature is at or below that set out in section *10.1. Environmental on page 78*.
- Heat sink fans freely rotating and dust free.
- The Enclosure in which the drive is installed should be free from dust and condensation; furthermore ventilation fans and air filters should be checked for correct air flow.

Checks should also be made on all electrical connections, ensuring screw terminals are correctly torqued; and that power cables have no signs of heat damage.

3.14. IP66 (NEMA 4X) Lock Off

Mains switch-disconnector Lock Off

On the switched models the mains switch-disconnector can be locked in the 'Off' position using a 20mm standard shackle padlock (not supplied).

IP66 / NEMA 4X Unit Lock Off

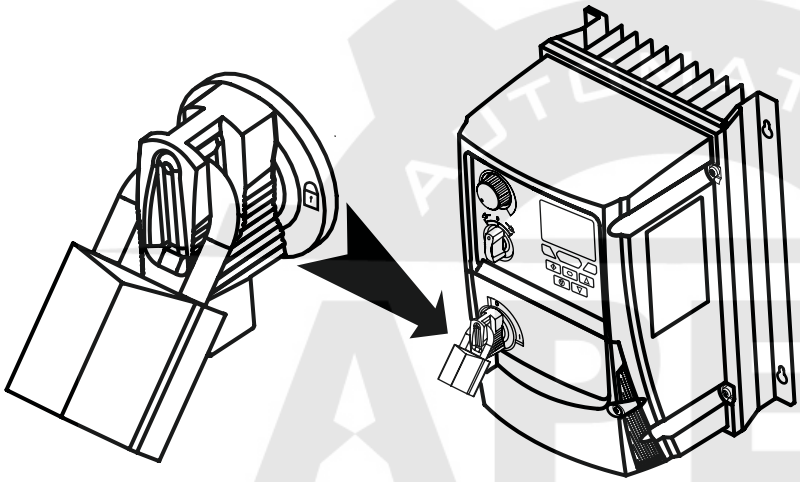

4. Electrical Installation

4.1. Connection Diagram

All power terminal locations are marked directly on the product. IP20 Frame Size 2 – 4 units have AC power input located at the top with the motor and brake resistor connections located at the bottom. All other units have power terminals located at the bottom.

4.1.1. Electrical Power Connections

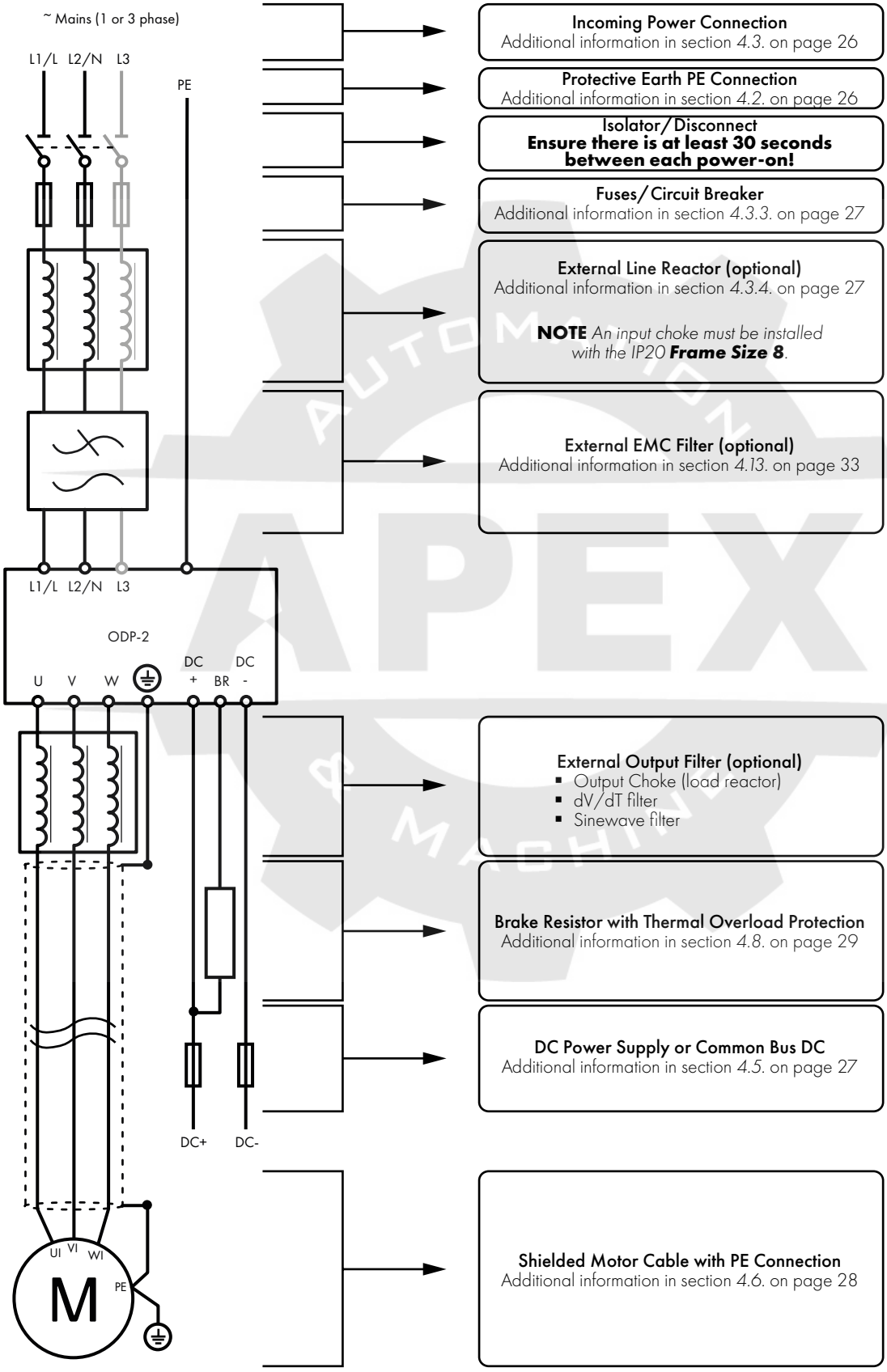

NOTE Enclosed drives are not suitable for rigid conduit system connection.

4.1.2. Electrical Power Connections – IP66 (NEMA 4X) Switched Models

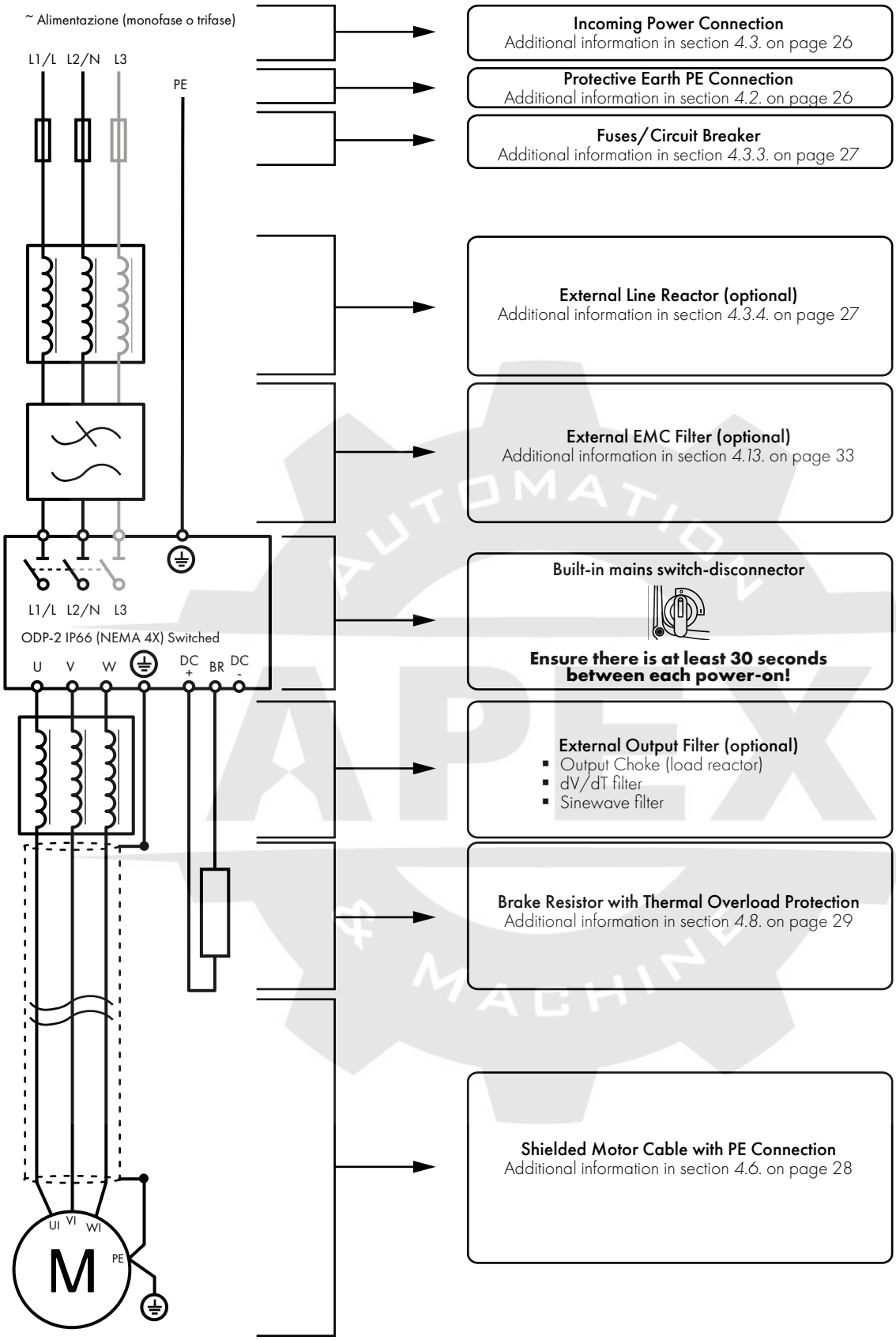

4.2. Protective Earth (PE) Connection

4.2.1. Grounding Guidelines

Adequate safety earthing must be provided in accordance with local wiring rules and codes of practice. The ground terminal of each Optidrive should be connected back to the common safety earth bar to maintain touch potentials within safe limits. The ground terminal of each Optidrive should be individually connected DIRECTLY to the site ground bus bar (through the EMC filter if installed). Optidrive ground connections should not loop from one drive to another, or to, or from any other equipment. Ground impedance must conform to local industrial safety regulations and/or electrical codes.

To meet UL regulations, UL approved ring crimp terminals should be used for all ground wiring connections.

The integrity of all ground connections should be checked periodically.

4.2.2. Protective Earth Conductor

The Cross sectional area of the PE Conductor must be at least equal to that of the incoming supply conductors.

4.2.3. Motor Ground

The driven motor must be locally connected to a suitable ground location to maintain touch potentials within safe limits. In addition, the motor ground must be connected to one of the ground terminals on the drive.

4.2.4. Ground Fault Monitoring

As with all inverters, a leakage current to earth can exist. The Optidrive is designed to produce the minimum possible leakage current whilst complying with worldwide standards. The level of current is affected by motor cable length and type, the effective switching frequency, the earth connections used and the type of RFI filter installed. If an ELCB (Earth Leakage Circuit Breaker) is to be used, the following conditions apply:

- A Type B Device must be used.
- A device with 10ms trip delay is recommended.
- Individual device should be used for each Optidrive.
- The device must be suitable for protecting equipment with a DC component in the leakage current.
- The device should be not sensitive to high frequency leakage current.

4.2.5. Shield Termination (Cable Screen)

The safety ground terminal provides a grounding point for the motor cable shield. The motor cable shield connected to this terminal (drive end) should also be connected to the motor frame (motor end). Use a shield terminating or EMI clamp to connect the shield to the safety ground terminal, refer to section *4.13. EMC Compliant Installation on page 33*.

4.3. Incoming Power Connection

⚠	Ensure there is at least 30 seconds between each power-on.

4.3.1. Suitability

All Optidrive P2 models are designed for use on a single phase or balanced three phase supply depending on the model.

For all models and ratings when working with an IT Supply network, or any power supply type where the phase to earth voltage may exceed the phase to phase voltage (such as ungrounded supplies), the internal EMC filter and surge protection must be disconnected before connecting the supply. Refer to section *10.6. Internal EMC Filter and Varistors – Disconnection Procedure on page 83* for further information.

For three phase supply models, a maximum of 3% imbalance is allowed between phases.

For compliance with CE and C Tick EMC requirements, refer to section *4.13. EMC Compliant Installation on page 33*.

- A fixed installation is required according to IEC61800-5-1 with a suitable disconnecting device installed between the Optidrive and the main Power Source. The disconnecting device must conform to the local safety code / regulations (e.g. within Europe, EN60204-1, Safety of machinery).

4.3.2. Connection

- For 1 phase ac supply, power should be connected to L1/L, L2/N.
- For a DC Supply, the main power cables should be connected to L1/L, L2/N.
- For 3 phase ac supplies, the mains power cables should be connected to L1, L2, and L3. Phase sequence is not important. Neutral connection is not required.

4.3.3. Cable Selection

- The cables should be dimensioned according to any local codes or regulations. Maximum dimensions for each drive model are given in section *10.2. Input/Output Power and Current Ratings on page 78*.
- For installation within the European Union, cable type should be selected according tosection *4.13. EMC Compliant Installation on page 33*.

4.3.4. Fuse / Circuit Breaker Selection

- Suitable fuses to provide wiring protection of the input power cable should be installed in the incoming supply line, according to the data in section *10.2. Input/Output Power and Current Ratings on page 78*.
- The fuses must comply with any local codes or regulations in place. In general, type gG (IEC 60269) or UL type J fuses are suitable (exception: Eaton Bussmann FWP series must be used for size 6A & 6B IP20 models); however in some cases type aR fuses may be required. The operating time of the fuses must be below 0.5 seconds.
- Where allowed by local regulations, suitably dimensioned type B MCB circuit breakers of equivalent rating may be utilised in place of fuses, providing that the clearing capacity is sufficient for the installation.
- For UL compliant installations, fuses must be used, refer to section *10.4. Additional Information for UL Approved Installations on page 81*.
- Please refer to section *10.3. Input Power Supply Requirements on page 81* for actual supply short-circuit capacity limits for each drive.
- The Optidrive provides thermal and short circuit protection for the connected motor and motor cable.

4.3.5. Input Choke

An optional Input Choke is recommended to be installed in the supply line for drives where any of the following conditions occur:

- The incoming supply impedance is low or the fault level / short circuit current is high.
- The supply is prone to dips or brown outs.
- An unbalanced supply system is used (3 phase drives) where the voltage levels during on load operation exceed the designed 3% capacity of the Optidrive.
- The power supply to the drive is via a busbar and brush gear system (typically overhead Cranes).

In all other installations, an input choke is recommended to ensure protection of the drive against power supply faults.

4.4. Operation of 3 Phase drives from a Single Phase Supply

A special function of Optidrive P2 allows some drives designed for operation on 3 phase supplies to be operated on a single phase supply of the correct rated voltage at up to 50% of the nominal capacity.

For Example, Model Number ODP-2-64450-3KA4N can be operated on a single phase supply, 380 – 480 volts, with the maximum output current limited to 45 Amps.

The supply must be connected to the L1 and L2 terminals of the drive.

If operation on a single phase supply is required, please contact your sales partner to ensure a suitable drive unit is selected.

4.5. Operation with DC Power Supply or Common DC Bus

Optidrive P2 models provide terminals to directly connect to the DC Bus for applications which require this. For further information on using the DC Bus connections, please refer to your Invertek Drives sales Partner.

4.6. Motor Connection

- The drive inherently produces fast switching of the output voltage (PWM) to the motor compared with operation of the motor directly from the mains supply. Most modern industrial motors are wound for operation with a variable speed drive and will have insulation rated accordingly. However, on some motors the quality of insulation may be insufficient or unknown. In such cases the motor manufacturer should be consulted and preventative measures may be required prior to operating with the drive.
- The motor should be connected to the Optidrive U, V, and W terminals using a suitable 3 or 4 core cable. Where a 3 core cable is utilised, with the shield operating as an earth conductor, the shield must have a cross sectional area at least equal to the phase conductors when they are made from the same material. Where a 4 core cable is utilised, the earth conductor must be of at least equal cross sectional area and manufactured from the same material as the phase conductors.
- Automatic switchgear should not be installed between the drive output and the motor, opening and closing contacts in this circuit whilst the drive is energised will inevitably reduce the lifetime of the drive and could cause product failure. If an isolator is required to be placed between the drive and the motor in order to comply with local regulations, the device must not be operated when the drive is running.
- For installation within the European Union, refer to section *4.13. EMC Compliant Installation on page 33*. For all installations it is recommended to use an overall shielded cable or take measures such as installation within metal tube or duct work to prevent electromagnetic radiation which may cause disturbance to other equipment or increase bearing currents in motors.

The motor earth must be connected to one of the Optidrive earth terminals to provide a low impedance path for common mode leakage current to return to the drive.

4.7. Motor Terminal Box Connections

Most general purpose motors are wound for operation on dual voltage supplies. This is indicated on the nameplate of the motor. This operational voltage is normally selected when installing the motor by selecting either STAR or DELTA connection. STAR always gives the higher of the two voltage ratings.

Incoming Supply Voltage	Motor Nameplate Voltages	Connection	
230	230 / 400	Delta Δ	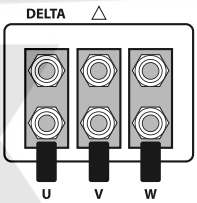
400 / 460	400 / 690		
575	*575 / 1000*		
400	230 / 400	Star ⅄	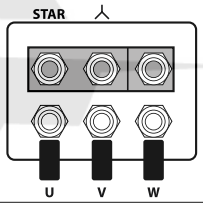
575	330 / 575		

4.8. Connecting a Brake Resistor

Optidrive P2 units feature an internal brake transistor, fitted as standard for all models. The brake resistor should be connected to the DC+ and BR terminals of the drive. These terminals are shrouded, and the shrouding should be removed to access the terminals.

4.8.1. IP20 Drive Models

Frame Sizes 2, 3, 4 & 5

Remove the plastic cover from the base of the drive as indicated.

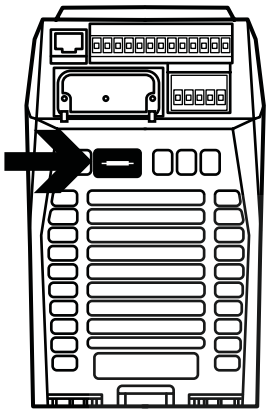

Frame Sizes 6A, 6B & 8

Remove the plastic cover from inside the drive as indicated.

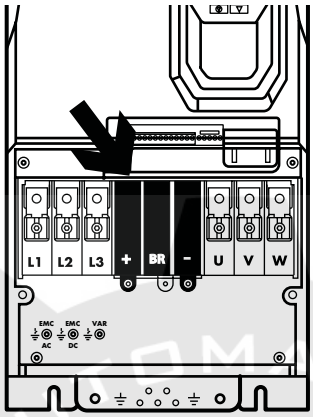

4.8.2. IP55 & IP66

All frame sizes

Remove the plastic cover from inside the drive as indicated.

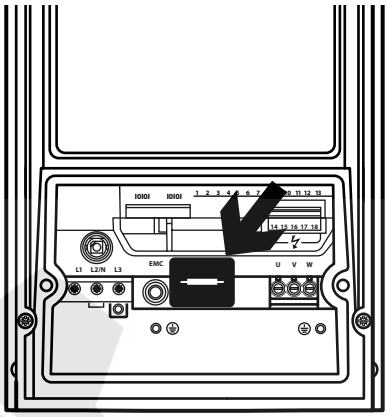

The brake transistor is enabled using P1-05 (Refer to section *6.2. Parameter Group 1 – Basic Parameters on page 43* for further information).

Software protection against brake resistor overload is carried out within the drive. For correct protection of the brake resistor, the following settings are required:

- Set P1-14 = 201 (where 201 is the default password setting for advanced parameter access).
- Enter the resistance of the brake resistor in P6-19 (Ohms).
- Enter the power of the brake resistor in P6-20 (kW).

Dynamic Brake Resistor with Thermal Overload Protection

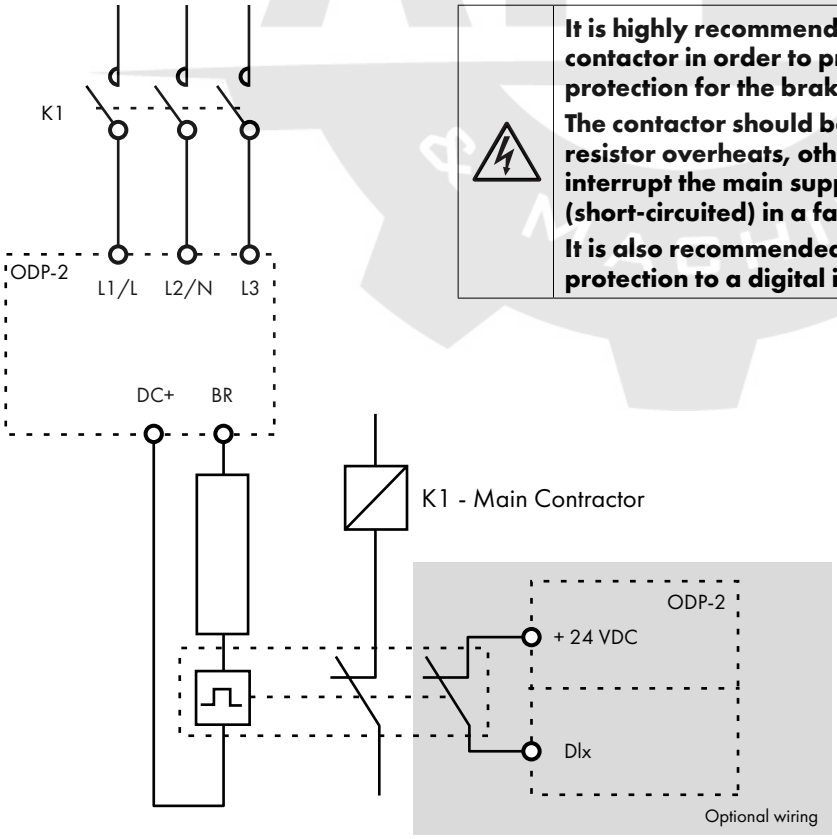

Thermal Overload / Brake Resistor
with internal Over Temperature switch

It is highly recommended to equip the drive with a main contactor in order to provide an additional thermal overload protection for the braking resistor.

The contactor should be wired so that it will open when the resistor overheats, otherwise the drive will not be able to interrupt the main supply if the brake chopper remains closed (short-circuited) in a fault situation.

It is also recommended to wire the thermal overload protection to a digital input of the drive as an External Trip.

The voltage level at these terminals may exceed 800V DC.

Stored charge may be present after disconnecting the mains power.

Allow a minimum of 5 minutes discharge after power off before attempting any connection to these terminals.

4.9. Control Terminal Wiring

- All analog signal cables should be suitably shielded. Double shielded twisted pair cables are recommended for analog signal cables.
- Power and Control Signal cables must be routed separately where possible, and must not be routed parallel to each other.
- Observe the minimum recommended distance between cables show in section *4.13. EMC Compliant Installation on page 33*.
- Signal levels of different voltages e.g. 24 Volt DC and 110 Volt AC, should not be routed in the same cable.
- Maximum control terminal tightening torque is 0.5Nm.
- Control Cable entry conductor size: 0.05 – 2.5mm^2 / 30 – 12 AWG.

4.9.1. Control Connections

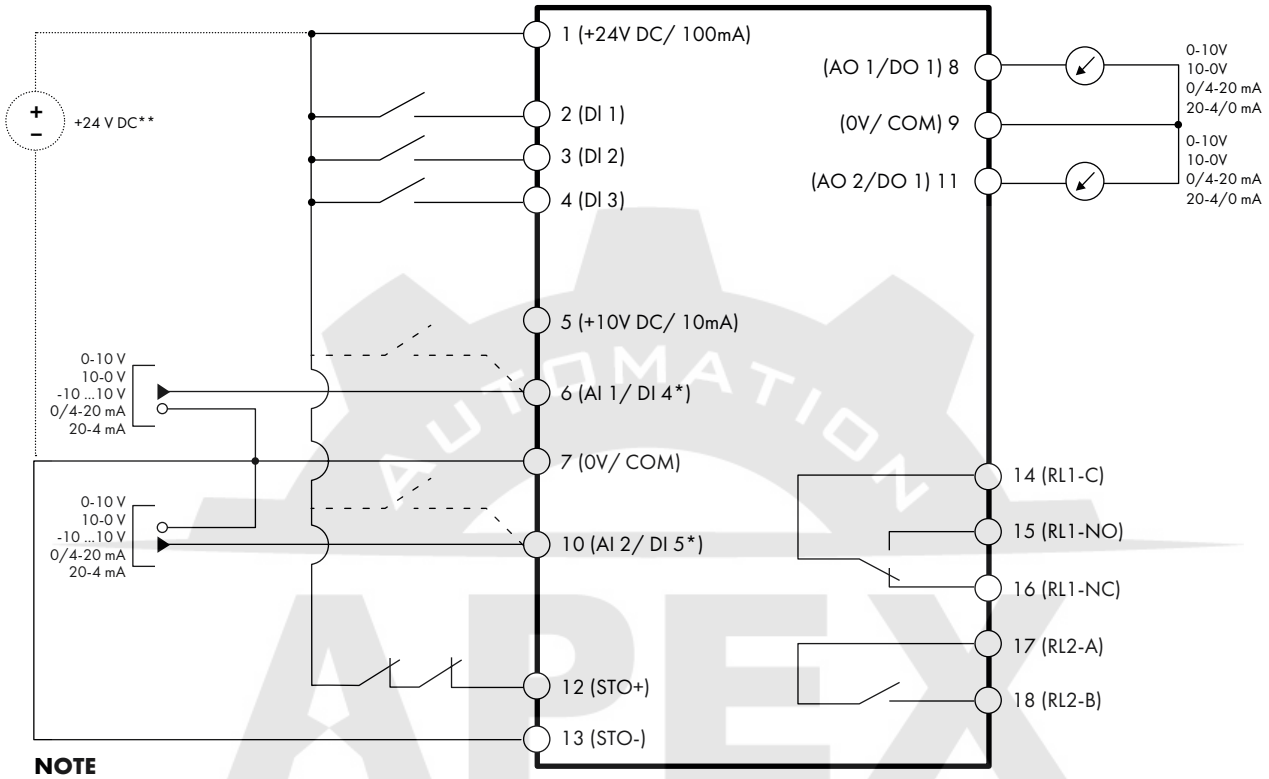

NOTE
* Dashed lines shows connection for analog inputs in digital mode ** Optional external 24 V DC power supply

	Key		Default Function		Sec.	Page
			Open	Closed		
1	+24V DC	24 Volt DC Input / Output	On-board +24V DC Supply (100mA) or External 24V DC Input		4.10.1	31
2	DI 1	Digital Input 1 (Run Enable)	STOP	RUN	4.10.2	31
3	DI 2	Digital Input 2	FORWARD	REVERSE	4.10.2	31
4	DI 3	Digital Input 3	P1-12 Reference	Preset Speeds	4.10.2	31
5	+10V DC	+10Volt DC Output	On-board +10V DC Supply (10 mA)			
6	AI 1 / DI 4	Analog Input 1 / Digital Input 4	Speed Reference 1 (0-10V)		4.10.3	31
7	0V / COM	0 Volt Common	0V Common for AI/AO/DI/DO			
8	AO 1	Analog Output 1	Motor Speed (0-10V)		4.10.4	31
9	0V / COM	0 Volt Common	0V Common for AI/AO/DI/DO			
10	AI 2 / DI 5	Analog Input 2 / Digital Input 5	P2-01 Speed Ref.	P2-02 Speed Ref.	4.10.3	31
11	AO2	Analog Output 2	Motor Current (0-10V)		4.10.4	31
12	STO+	STO + 24V DC Connection	InHibit	Run Permit	4.14	35
13	STO-	STO 0 Volt Connection				
14	RL1-COM	Auxiliary Relay Output 1 Common			4.10.5	31
15	RL1-NO	Auxiliary Relay Output 1 Normally Open	Drive Healthy	Drive Faulty	4.10.5	31
16	RL1-NC	Auxiliary Relay Output 2 Normally Closed	Drive Faulty	Drive Healthy	4.10.5	31
17	RL2-A	Auxiliary Relay Output 2	Drive Stopped	Drive Running	4.10.5	31
18	RL2-B	Auxiliary Relay Output 2			4.10.5	31

NOTE Digital Inputs: Logic High = 8-30V DC (30V DC max) Analog Outputs: 0 – 10 Volt / 4-20mA (20mA max)
SAFE TORQUE OFF input: Logic High = 18-30V DC (Also refer to section *4.14. Safe Torque Off*)

4.10. Control Terminal Connections

Example connection schematics are provided in section *7.3. Example Connection Schematics on page 49.*

4.10.1. +24V DC Input / Output

When the mains power is applied to the drive, terminal 1 provides a +24V DC output, maximum load 100mA. This may be used to activate digital inputs or provide power to sensors.

When no mains power is applied to the drive, the drive control electronics may be powered from an external +24V DC source. When powered in this way, all analog and digital I/O and communication functions remain operative, however the motor may not be operated, which allows safe testing and commissioning of the installation without risk of high voltage being present. When powered in this way, the drive requires up to 100mA.

4.10.2. Digital Inputs

Up to five digital inputs are available. The function of the inputs is defined by parameters P1-12 and P1-13, which are explained in section *7. Control Terminal Functions on page 46.*

4.10.3. Analog Inputs

Two analog inputs are available, which may also be used as digital Inputs if required. The signal formats are selected by parameters as follows:

- Analog Input 1 Format Selection Parameter P2-30.
- Analog Input 2 Format Selection Parameter P2-33.

These parameters are described more fully in section *8.1. Parameter Group 2 - Extended Parameters on page 53.*

The function of the analog input, e.g. for speed reference or PID feedback for example is defined by parameters P1-12 and P1-13. The function of these parameters and available options are described in section *7. Control Terminal Functions on page 46.*

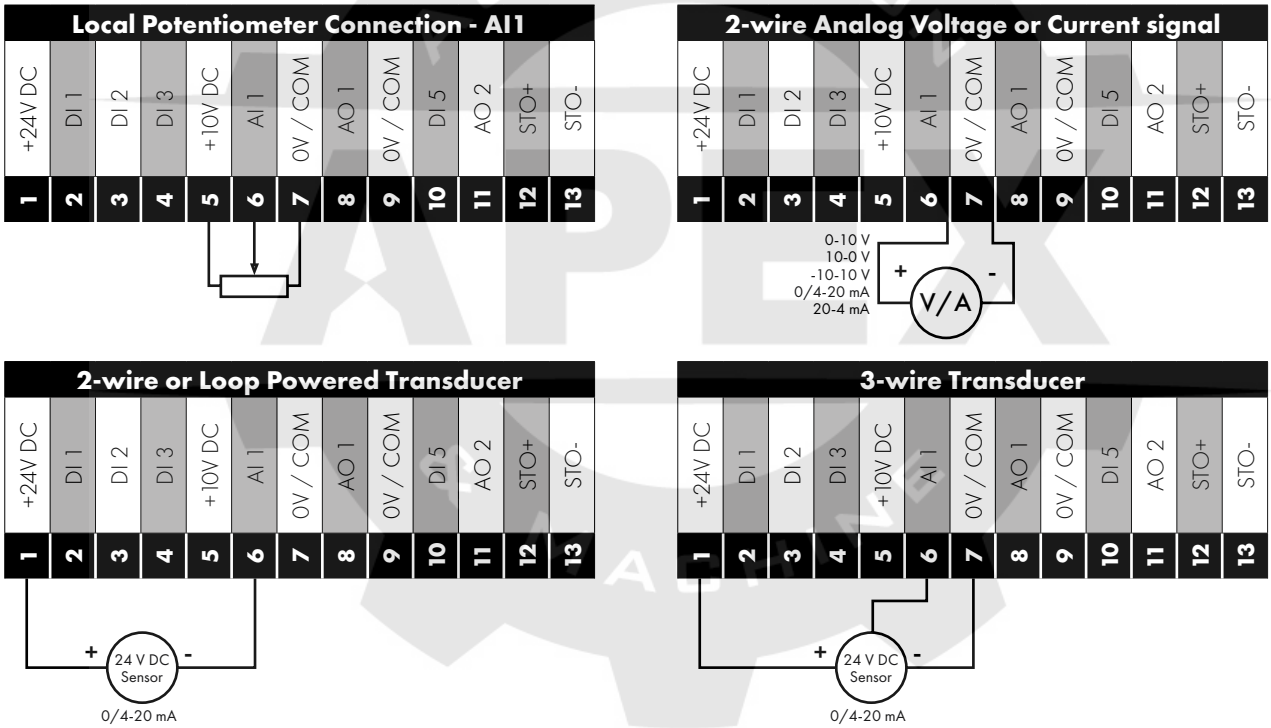

4.10.4. Analog Outputs

Two analog outputs are available, and may be used for 0 – 10 Volt Signal (max load 20mA), 0 – 20mA, 4 – 20mA or a digital +24Volt DC, 20mA output. The parameters to select function and format are as follows.

Analog Output	Function selected by	Format selected by
Analog Output 1	P2-11	P2-12
Analog Output 2	P2-13	P2-14

These parameters are described more fully in section *8.1. Parameter Group 2 - Extended Parameters on page 53.*

4.10.5. Auxiliary Relay Outputs

Two relay outputs are available, which are intended to be used to switch external resistive loads up to 5A at 230V AC or 30V DC.

Relay 1 has both normally open and normally closed contacts available. Relay 2 provides a simple open or closed contact.

The relay output function may be configured using parameters P2-15 and P2-18, which are described in section *8.1. Parameter Group 2 - Extended Parameters on page 53.*

4.11. IP66 Switched Version Integrated Control Switch and Potentiometer Wiring

Optidrive P2 is optionally available with an integrated mains switch-disconnector and front mounted control switch and potentiometer. This allows the drive to be operated directly from the front control panel, whilst also providing for options such as Hand / Auto or Local / Remote Control etc.

The integrated switch in IP66 Outdoor models operates in parallel with drive terminal 2 (T2) and terminal 3 (T3) as digital input 1 and digital input 2. By default, the integrated switch is enabled.

Integrated Control Switch and Potentiometer Wiring

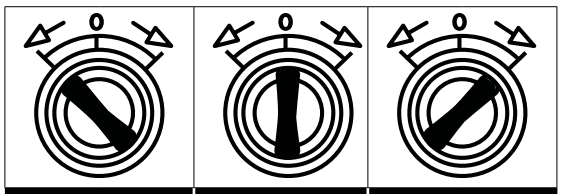

Switch Left		Switch Centre		Switch Right		
DI1	DI2	DI1	DI2	DI1	DI2	
1	1	0	0	1	0	Lc-Off
0	0	0	0	0	0	Lc-On
0	1	0	0	1	0	Altern

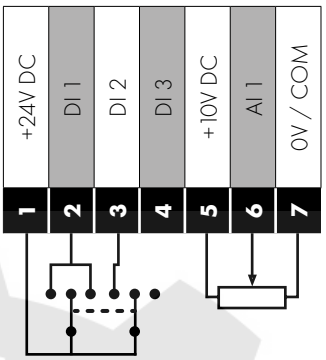

4.11.1. *Disabling built-in switches*

If required, the built-in control switch may be disabled using the following method:

1) Ensure the drive is stopped (Display shows "Stop").
2) Enable Advanced Parameter Access by setting the correct value in P1-14 (default : 201).
3) Scroll down to parameter P0-01 (Display shows P0-01).
4) Press and hold "STOP" button for >1s, drive will show:
   IP66 Switch Setup
   2: Pos >>DI1, Pos<<DI2
   1: Switch disabled
   0: Pos >>DI1, Pos <<DI1&2
5) Use "UP" or "DOWN" key to select the option:
   0: Pos >>DI1, Pos <<DI1&2 means integrated switches are enabled.
   1: Switch disabled means the switches are locked/disabled.
   2: Pos >>DI1, Pos<<DI2 means that Revers direction is disabled via built-in switch (can be unlocked via external enable signal connected to DI1 – terminal 2).
6) Press the "STOP" button again to exit.

4.12. Motor Thermal Overload Protection

4.12.1. *Internal Thermal Overload Protection*

Optidrive P2 has internal motor overload protection (current limit) set at 150% of FLC. This level may be adjusted using P4-07.
The drive has an in-built motor thermal overload function; this is in the form of an "I.t-trP" trip after delivering >100% of the value set in P1-08 for a sustained period of time (e.g. 150% for 60 seconds).

4.12.2. *Motor Thermistor Connection*

Where a motor thermistor is to be used, it should be connected as follows:

Motor Thermistor Connection

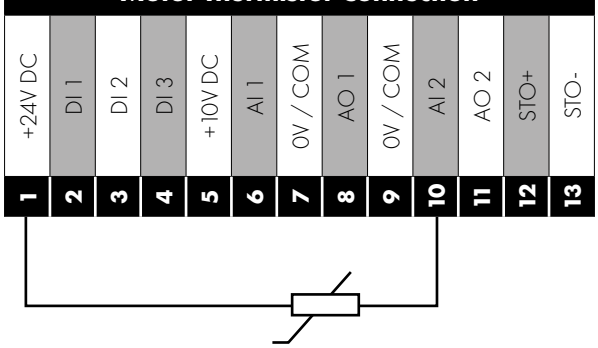

Additional Information

- Compatible Thermistor: PTC Type, 2.5kΩ trip level.
- Use a setting of P1-13 that has DI5/AI2 function as E-TRIP "External Trip", e.g. P1-13 = 6. Refer to section *7.2. Digital Input Configuration Parameter P1-13 on page 48* for further details.
- Enable the Motor PTC Thermistor Input function in parameter P2-33.

4.13. EMC Compliant Installation

4.13.1. Installation within the UK and European Union

All equipment installed within the UK or European Union must comply with the applicable UK or European EMC Directive. The installer must be familiar with the Directive and appropriate good EMC practice. Invertek Drives' products may be considered as a Basic Drive Module or Complete Drive Module according to the EMC standard definition dependent on the drive type. The BDM or CDM may then be incorporated into a Power Drive System. It is the sole responsibility of the installer to ensure that the complete PDS is compliant with the Directive.

This section of the User Guide provides general guidance to ensure compliance can be achieved.

4.13.2. Recommended Installation for EMC Compliance

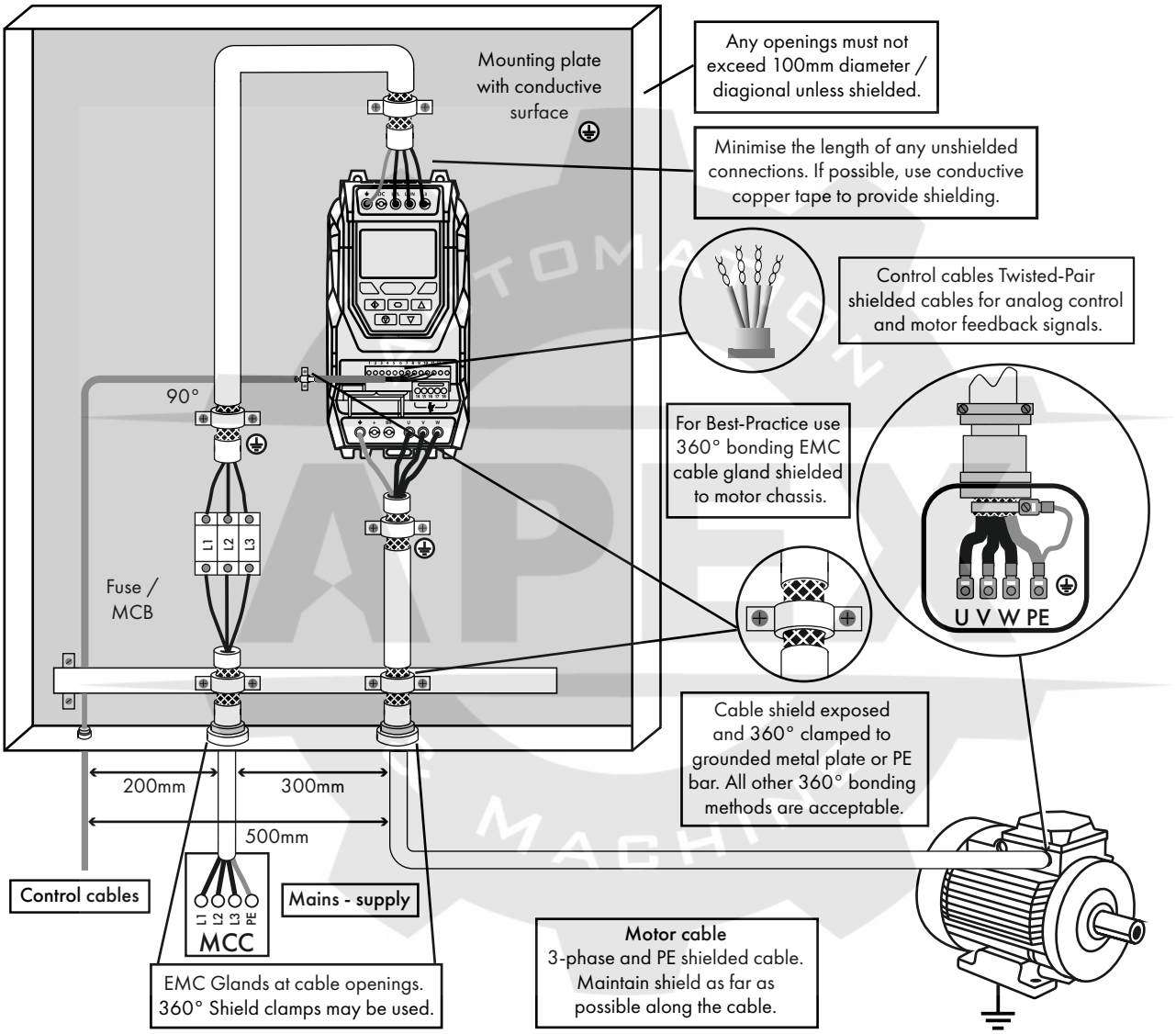

4.13.3. Recommended Cable Types by EMC Category

Number of Input Phases	Rated Supply Voltage	Frame Size	IP rating	Maximum Motor Cable Length to Achieve		
				C1 [1, 2, 5, 6, 8]	C2 [3, 5, 6, 8]	C3 [4, 7, 8]
1	230	2	IP20, IP66	1 (5)	5 (25)	25 (100)
		3	IP66	-	5	25
		4	IP66	-	-	25
3	230	2, 3	IP20, IP66	1 (5)	5 (25)	25 (100)
		4, 5	IP20, IP66	1 (5)	5 (25)	25 (100)
		4, 5	IP55	-	-	25 (100)
		6A, 6B	IP20	-	100	100
		6, 7	IP55	-	-	25 (100)
3	400	2, 3	IP20, IP66	1 (5)	5 (25)	25 (100)
		4, 5	IP20, IP66	1 (5)	5 (25)	25 (100)
		4, 5	IP55	-	-	25 (100)
		6A, 6B	IP20	-	100	100
		6, 7	IP55	-	-	25 (100)
		8	IP20, IP55	-	5	25
		8	IP20, IP55	-	100	100

NOTE

- Data in brackets are permitted cable lengths with additional external EMC filter (optional).
- Drives with rated voltage above 480Volts are not intended for use within the UK or European Union.

General

[1] Compliance with category C1 conducted emissions only is achieved.

Supply Cable

[2] A screened (shielded) cable suitable for fixed installation with the relevant mains voltage in use. Braided or twisted type screened cable where the screen covers at least 85% of the cable surface area, designed with low impedance to HF signals. Installation of a standard cable within a suitable steel or copper tube is also acceptable.

[3] A cable suitable for fixed installation with relevant mains voltage with a concentric protection wire. Installation of a standard cable within a suitable steel or copper tube is also acceptable – in this case, ensure that metal tube is adequately grounded.

[4] A cable suitable for fixed installation with relevant mains voltage may be used up to the PDS power connection port. A shielded type cable is not necessary.

Motor Cable

[5] A screened (shielded) cable suitable for fixed installation with the relevant voltage in use. Braided or twisted type screened cable where the screen covers at least 85% of the cable surface area, designed with low impedance to HF signals. Installation of a standard cable within a suitable steel or copper tube is also acceptable – in this case, ensure that metal tube is adequately grounded.

[6] The cable shield should be terminated at the motor end using an EMC type gland allowing connection to the motor body through the largest possible surface area. The shield must also be terminated at the drive end, as close as practically possible to the drive output terminals. Where drives are mounted in a steel control panel enclosure, the cable screen may be terminated directly to the control panel backplate using a suitable EMC clamp or gland fitted as close to the drive as possible. The drive earth terminal must also be connected directly to this point, using a suitable cable which provides low impedance to high frequency currents. For IP55 and IP66 drives, connect the motor cable shield to the gland plate or internal ground clamp.

[7] A cable suitable for fixed installation with relevant mains voltage with a concentric protection wire. Installation of a standard cable within a suitable steel or copper tube is also acceptable.

Control Cable

[8] A shielded cable with low impedance shield. Twisted pair cable is recommended for analog signals

4.13.4. Enclosed Drives Recommended Cable Connections

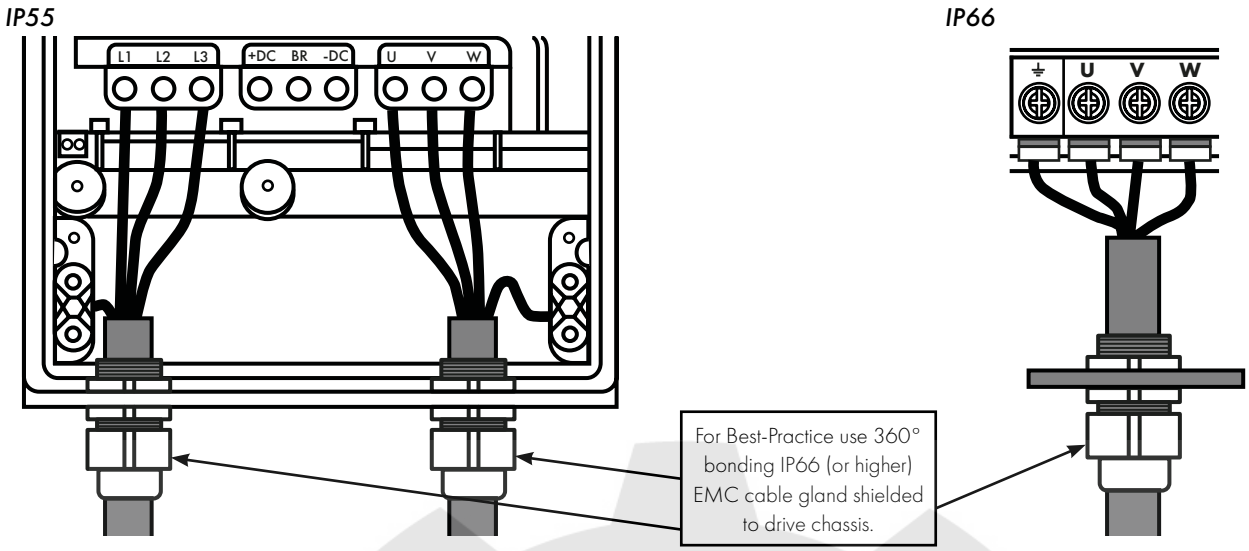

4.14. Safe Torque Off

Safe Torque OFF will be referred to as "STO" through the remainder of this section.

4.14.1. Responsibilities

The overall system designer is responsible for defining the requirements of the overall "Safety Control System" within which the drive will be incorporated; furthermore the system designer is responsible for ensuring that the complete system is risk assessed and that the "Safety control System" requirements have been entirely met and that the function is fully verified, this must include confirmation testing of the "STO" function before drive commissioning.

The system designer shall determine the possible risks and hazards within the system by carrying out a thorough risk and hazard analysis, the outcome of the analysis should provide an estimate of the possible hazards, furthermore determine the risk levels and identify any needs for risk reduction. The "STO" function should be evaluated to ensure it can sufficiently meet the risk level required.

4.14.2. What STO Provides

The purpose of the "STO" function is to provide a method of preventing the drive from creating torque in the motor in the absence of the "STO" input signals (Terminal 12 with respect to Terminal 13), this allows the drive to be incorporated into a complete safety control system where "STO" requirements need to be fulfilled.[1]

The "STO" function can typically eliminate the need for electro-mechanical contactors with cross-checking auxiliary contacts as per normally required to provide safety functions.[2]

The drive has the "STO" function built-in as standard and complies with the definition of "Safe torque off" as defined by IEC 61800-5-2:2007.

The "STO" function also corresponds to an uncontrolled stop in accordance with category 0 (Emergency Off), of IEC 60204-1. This means that the motor will coast to a stop when the "STO" function is activated, this method of stopping should be confirmed as being acceptable to the system the motor is driving.

The "STO" function is recognised as a fail-safe method even in the case where the "STO" signal is absent and a single fault within the drive has occurred, the drive has been proven in respect of this by meeting the following safety standards:

	SIL (Safety Integrity Level)	PFHD (Probability of dangerous Failures per Hour)	SFF (Safe failure fraction %)	Lifetime assumed
EN 61800-5-2	2	1.23E-09 1/h (0.12 % of SIL 2)	50	20 Yrs

	PL (Performance Level)	CCF (%) (Common Cause Failure)	MTTFd	Category
EN ISO 13849-1	PL d	1	4525a	3

	SILCL
EN 62061	SILCL 2

NOTE The values achieved above maybe jeopardised if the drive is installed outside of the Environmental limits detailed in section *10.1. Environmental on page 78.*

4.14.3. What STO Does Not Provide

⚠	Disconnect and ISOLATE the drive before attempting any work on it. The "STO" function does not prevent high voltages from being present at the drive power terminals.
	[1] **NOTE** The "STO" function does not prevent the drive from an unexpected re-start. As soon as the "STO"inputs receive the relevant signal it is possible (subject to parameter settings) to restart automatically, Based on this, the function should not be used for carrying out short-term non-electrical machinery operations (such as cleaning or maintenance work).
	[2] **NOTE** In some applications additional measures may be required to fulfil the systems safety function needs: the "STO" function does not provide motor braking. In the case where motor braking is required a time delay safety relay and/or a mechanical brake arrangement or similar method should be adopted, consideration should be made over the required safety function when braking as the drive braking circuit alone cannot be relied upon as a fail safe method.
	When using permanent magnet motors and in the unlikely event of multiple output power devices failing then the motor could effectively rotate the motor shaft by 180/p degrees (Where p denotes number of motor pole pairs).

4.14.4. "STO" Operation

When the "STO" inputs are energised, the "STO" function is in a standby state, if the drive is then given a "Start signal/command" (as per the start source method selected in P1-13) then the drive will start and operate normally.

When the "STO" inputs are de-energised then the STO Function is activated and stops the drive (Motor will coast), the drive is now in "Safe Torque Off" mode.

To get the drive out of "Safe Torque Off" mode then any "Fault messages" need to be reset and the drive "STO" input needs to be re-energised.

4.14.5. "STO" Status and Monitoring

There are a number of methods for monitoring the status of the "STO" input, these are detailed below:

Drive Display

In Normal drive operation (Mains AC power applied), when the drives "STO" input is de-energised ("STO" Function activated) the drive will highlight this by displaying "**InHibit**".

NOTE If the drive is in a tripped condition then the relevant trip will be displayed and not "InHibit".

Drive Output Relay

- Drive relay 1: Setting P2-15 to a value of "13" will result in relay opening when the "STO" function is activated.
- Drive relay 2: Setting P2-18 to a value of "13" will result in relay opening when the "STO" function is activated.

"STO" Fault Codes

Fault Code	Code Number	Description	Corrective Action
"Sto-F"	29	A fault has been detected within either of the internal channels of the "STO" circuit.	Refer to your Invertek Sales Partner

4.14.6. "STO" Function Response Time

The total response time is the time from a safety related event occurring to the components (sum of) within the system responding and becoming safe. (Stop Category 0 in accordance with IEC 60204-1).

- The response time from the "STO" inputs being de-energised to the output of the drive being in a state that will not produce torque in the motor ("STO" active) is less than 1ms.
- The response time from the "STO" inputs being de-energised to the "STO" monitoring status changing state is less than 20ms.
- The response time from the drive sensing a fault in the STO circuit to the drive displaying the fault on the display/Digital output showing drive not healthy is less than 20ms.

4.14.7. "STO" Electrical Installation

⚠	The "STO" wiring shall be protected from inadvertent short circuits or tampering which could lead to failure of the "STO" input signal, further guidance is given in the diagrams below.

In addition to the wiring guidelines for the "STO" circuit below, section *4.13.2. Recommended Installation for EMC Compliance on page 33* should also be followed.

The drive should be wired as illustrated below; the 24V DC signal source applied to the "STO" input can be either from the 24V DC on the drive or from an External 24V DC power supply.

4.14.8. Recommended "STO" Wiring

Using an External 24V DC Power Supply **Using the Drives On-board 24V DC Supply**

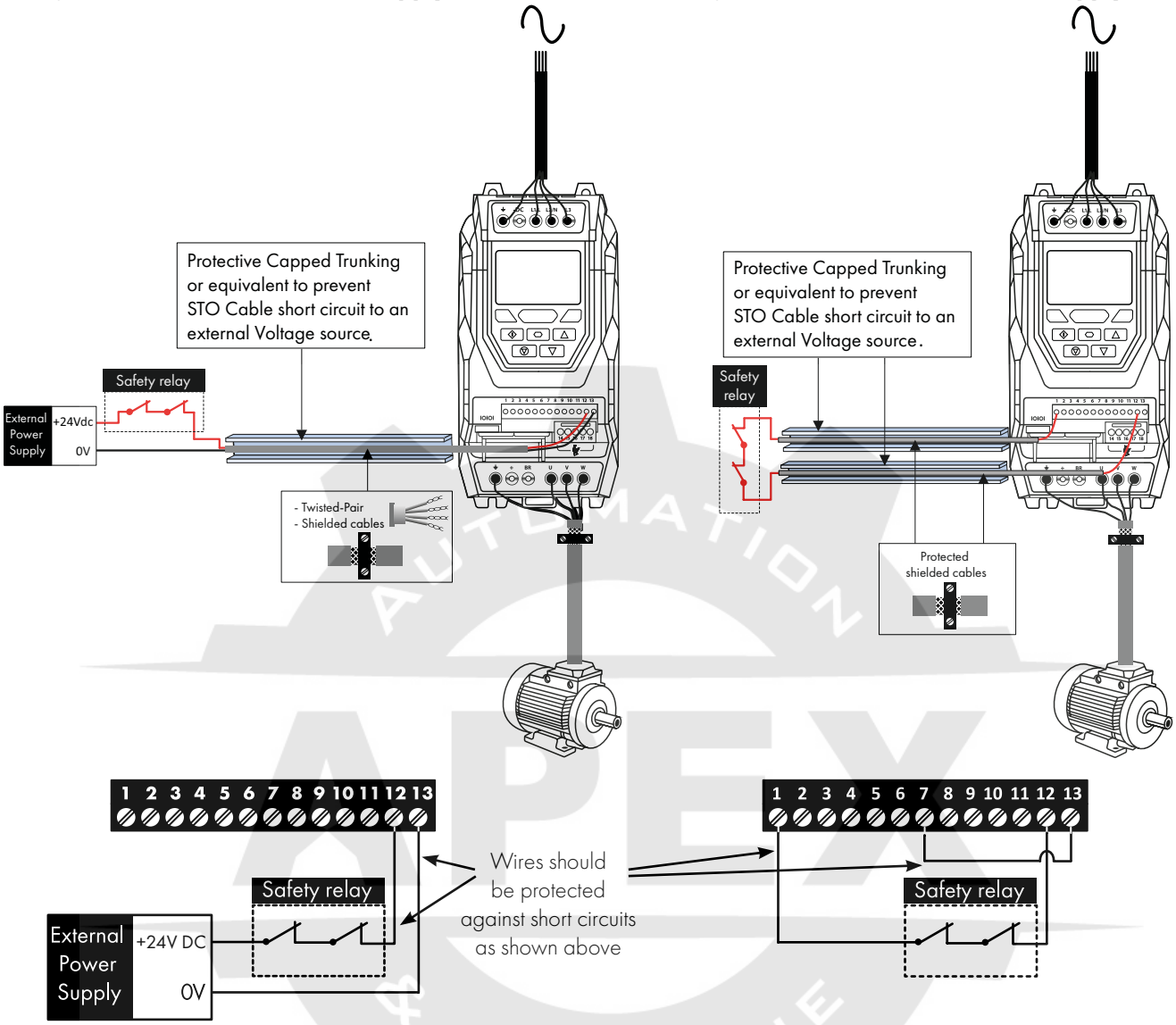

NOTE The Maximum cable length from Voltage source to the drive terminals should not exceed 25 mtrs.

4.14.9. External Power Supply Specification

Voltage Rating (Nominal)	24V DC
STO Logic High	18-30V DC (Safe torque off in standby)
Current Consumption (Maximum)	100mA

4.14.10. Safety Relay Specification

The safety relay should be chosen so that at minimum it meets the safety standards that the drive meets.

Standard Requirements	SIL2 or PLd SC3 or better (With Forcibly guided Contacts)
Number of Output Contacts	2 independent
Switching Voltage Rating	30V DC
Switching Current	100mA

4.14.11. Enabling the "STO" Function

The "STO" function is always enabled in the drive regardless of operating mode or parameter changes made by the user.

4.14.12. Testing the "STO" Function

Before commissioning the system the "STO" function should always be tested for correct operation, this should include the following tests:

- With the motor at standstill, and a stop command given to the drive (as per the start source method selected in P1-13):
  - De-energise the "STO" inputs (Drive will display "InHibit").
  - Give a start command (as per the start source method selected in P1-13) and check that the drive still displays "Inhibit" and that the operation is in line with the section *4.14.4. "STO" Operation* and section *4.14.5. "STO" Status and Monitoring.*
- With the motor running normally (from the drive):
  - De-energise the "STO" inputs.
  - Check that the drive displays "Inhibt" and that the motor stops and that the operation is in line with the section and section *4.14.4. "STO" Operation* and section *4.14.5. "STO" Status and Monitoring.*

4.14.13. "STO" Function Maintenance

The "STO" function should be included within the control systems scheduled maintenance program so that the function is regularly tested for integrity (Minimum once per Year), furthermore the function should be integrity tested following any safety system modifications or maintenance work. If drive fault messages are observed refer to section *11.1. Fault Messages on page 84* for further guidance.

5. Keypad and Display Operation

The drive is configured and its operation monitored via the keypad and display.

5.1. Keypad and Display Layout

Control Keypad provides access to the drive parameters, and also allows control of the drive when Keypad Mode is selected in P1-12.

IP20, IP55 & IP66 models keypad with TFT display

Main Displayed Parameter
Shows the drive status or the value of whichever of the selectable parameters is currently being shown on the main display.

Operating Information
Provides a real time display of key operating information, e.g. output current and power.

Quick Help Button
Provides access to short description of the displayed messages.

F1 Button
Functional Button which can be programmed only in internal PLC function block.

Start Button
When in Hand mode, used to Start the drive.

Stop / Reset Button
Used to reset a tripped drive.
When in Keypad mode, used to Stop the drive.

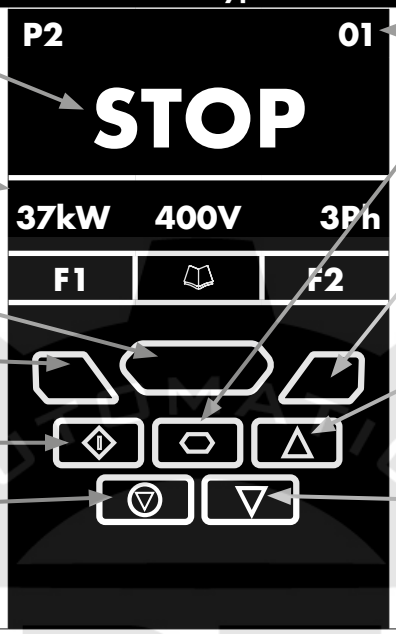

Drive Address
Drive serial communication address set in parameter P5-01.

Navigate Button
Used to display real-time information, to access and exit parameter edit mode and to store parameter changes.

F2 Button
Functional Button which can be programmed only in internal PLC function block.

Up Button
Used to increase speed in real-time mode or to increase parameter values in parameter edit mode.

Down Button
Used to decrease speed in real-time mode or to decrease parameter values in parameter edit mode.

5.2. Selecting the Language on the TFT Display

P2 01 STOP 15kW 400V 3Ph	Select Language Español Deutsch English	Select Language Español Deutsch English
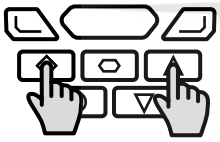	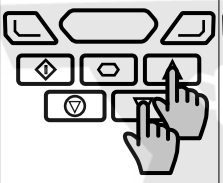	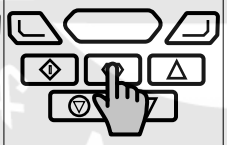
Hold down the Start and Up keys for >1s.	Use the Up and Down arrows to select a language.	Press the Navigate button to select.

5.2.1. Operating Displays

Inhibit / STO Active	Drive Stopped	Drive Running Output Frequency Display	Drive Running Output Current Display	Drive Running Motor Power Display	Drive Running Motor Speed Display
P2 01 **INHIBIT**	P2 01 **STOP**	Output Frequency 01 23.7Hz	Motor Current 01 15.3A	Motor Power 01 6.9kW	Motor Speed 01 718rpm
15kW 400V 3Ph	15kW 400V 3Ph	15.3A 6.9kW	6.9kW 23.7Hz	23.7Hz 15.3A	23.7Hz 15.3A
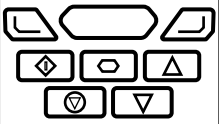	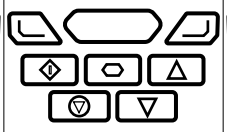	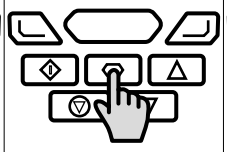	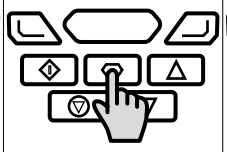	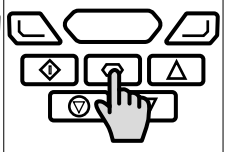	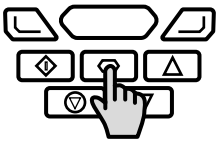
Drive Inhibited. The STO connections are not made. Refer to section *4.14.8. Recommended "STO" Wiring on page 37.*	Drive Stopped / Disabled.	Drive is enabled / running, display shows the output frequency (Hz). Press the Navigate key to select alternative displays.	Press the Navigate key for < 1 second. The display will show the motor current (Amps).	Press the Navigate key for < 1 second. The display will show the motor power (kW).	If P1-10 > 0, pressing the Navigate key for < 1 second will display the motor speed (RPM).

5.3. Additional Display Messages

Auto Tuning in Progress	External 24V DC Supply	Overload	Switching Frequency Reduction	Mains Loss	Maintenance Time Elapsed
Auto-tuning	P2 01 **Ext 24V**	P2 01 **OL** 23.7Hz	P2 01 **SF↓** 23.7Hz	P2 01 **ML** 23.7Hz	P2 01 🔧 23.7Hz
	External 24V mode	15.3A 6.9kW	15.3A 6.9kW	15.3A 6.9kW	15.3A 6.9kW
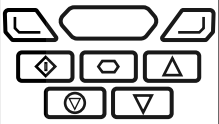	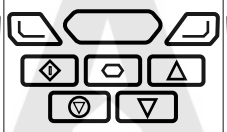	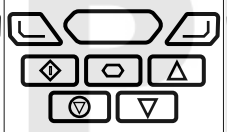	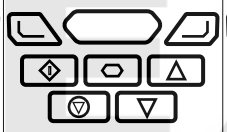		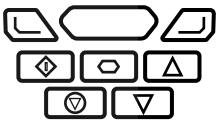
Auto tune in progress. See parameter P4-02 information in section *8.3. Parameter Group 4 – High Performance Motor Control on page 59.*	The drive control board is powered only from an external 24 Volt source, with no mains power applied.	Indicates an Overload condition. Output current exceeds the motor rated current entered in Parameter P1-08.	Switching frequency is reduced, due to high heatsink temperature.	The incoming mains power supply has been disconnected or is missing.	The user programmable maintenance reminder time has elapsed.

5.4. Changing Parameters

	P2 01	P2 01	P2 01	P2 01	P2 01
Stop	**P1-01**	**P1-08**	**30.0A** ↕	**P1-08**	**Stop**
15kW 400V 3Ph	50.0Hz	30.0A	P1-08 ↑30.0 ↓3.0	30.0A	15kW 400V 3Ph
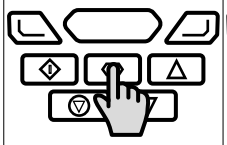	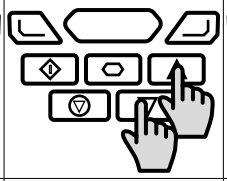	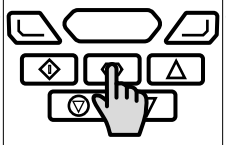	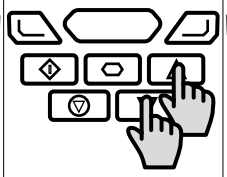	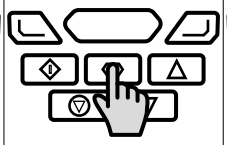	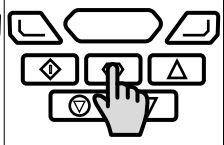
Press and hold the Navigate key > 2 seconds.	Use the up and down keys to select the required parameter. Drives with TFT display will show the present parameter value on the lower line of the display.	Press the Navigate key for < 1 second.	Adjust the value using the Up and Down keys. Drives with TFT display will show the maximum and minimum possible settings on the lower line of the display.	Press for < 1 second to return to the parameter menu.	Press for > 2 seconds to return to the operating display.

5.5. Parameter Factory Reset / User Reset

Optidrive P2 provides a feature to allow the user to define their own default parameter set. After commissioning all required parameters, the user can save these as the default parameters by setting P6-29 = 1. If required, the User Default Parameters may be cleared by setting P6-29 = 2.

If the user wishes to reload the User Default Parameters from the drive memory, the following procedure is used.

Factory Parameter Reset :			**User Parameter Reset :**		
P2 01	P2 01	P2 01	P2 01	P2 01	P2 01
Stop	**P-Def**	**Stop**	**Stop**	**U-Def**	**Stop**
15kW 400V 3Ph	50.0Hz	15kW 400V 3Ph	P1-08 ↑30.0 ↓3.0	30.0A	15kW 400V 3Ph
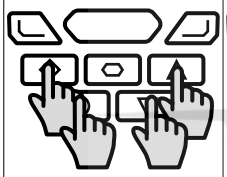	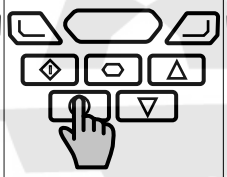	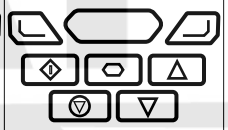	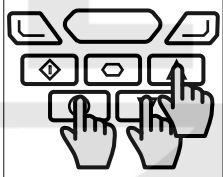	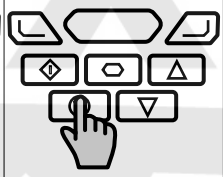	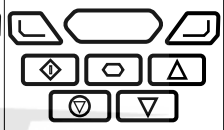
Press and hold the Up, Down, Start and Stop keys for >2s.	The display shows P-Def. Briefly press the Stop key.	The display returns to Stop. All parameters are reset to Factory defaults.	Press and hold the Up, Down and Stop keys for >2s.	The display shows U-Def. Briefly press the Stop key.	The display returns to Stop. All parameters are reset to Factory defaults.

5.6. Resetting the Drive Following a Trip

Optidrive P2 has many protection features, designed to protect both the drive and motor from accidental damage. When any of these protection features are activated, the drive will trip, and display a fault message. The fault messages are listed in section *11.1. Fault Messages on page 84*.

When a trip occurs, after the cause of the trip has been investigated and rectified, the user can reset the trip in one of the following ways:

- Press the keypad Stop key.
- Power off the drive completely, then power on again.
- If P1-13 > 0, switch off digital input 1, then back on again.
- If P1-12 = 4, reset via the fieldbus interface.
- If P1-12 = 6, reset via CAN.

5.7. Keypad Shortcuts

The following shortcuts can be used to speed up selecting and changing parameters when using the keypad.

5.7.1. Selecting the Parameter Groups

When extended or advanced parameter access is enabled (see section *8. Extended Parameters on page 53*), additional parameter groups are visible, and may be selected quickly by the following method.

Maximum frequency/Speed limit **P1-01**	Preset frequency/Speed 1 **P2-01**
50.0Hz	5.0Hz
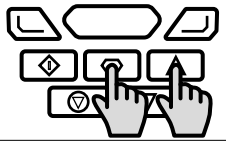	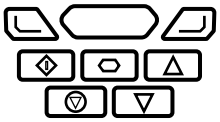
Whilst in the parameter selection menu, press the Navigate and Up or Navigate and Down keys simultaneously.	The next highest or lowest accessible parameter group will be selected.

5.7.2. Selecting the Lowest Parameter in a Group

Motor rated current **P1-08**	Maximum frequency/Speed limit **P1-01**
9.5A	50.0Hz
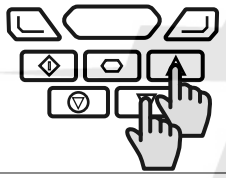	
Whilst in the parameter selection menu, press the Up and Down keys simultaneously.	The next lowest accessible parameter in the selected parameter group will be selected.

5.7.3. Setting a Parameter to the Minimum Value

Maximum frequency/Speed limit **1500 rpm**	Maximum frequency/Speed limit **0 rpm**
P1-01 ↑7500 rpm ↓0 rpm	P1-01 ↑7500 rpm ↓0 rpm
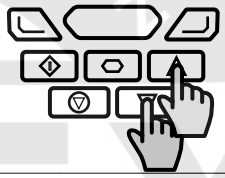	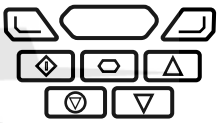
Whilst editing a parameter value, press the Up and Down keys simultaneously.	The parameter will be set to the lowest possible value.

5.7.4. Adjusting Individual Digits

When editing parameter values and making large changes, e.g. setting the motor rated speed from 0 to 1500RPM, it is possible to directly select the parameter digits using the following method.

Extended menu access **0**	Extended menu access **_0**	Extended menu access **_0**	Extended menu access **100**	Extended menu access **100**	Extended menu access **100**
P1-14 ↑30 000 ↓0	P1-14 ↑30 000 ↓0	P1-14 ↑30 000 ↓0	P1-14 ↑30 000 ↓0	P1-14 ↑30 000 ↓0	P1-14 ↑30 000 ↓0
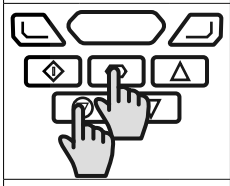	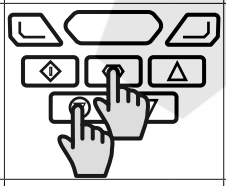	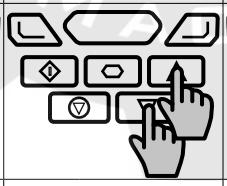	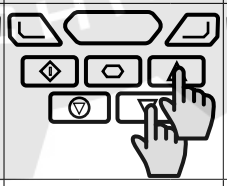	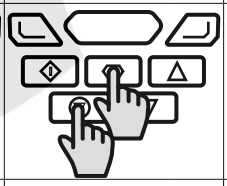	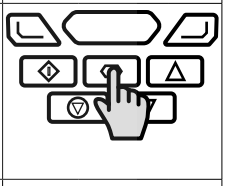
Whilst editing a parameter value, press the Stop and Navigate keys simultaneously.	The cursor will step one digit to the left. Repeating the key press will move another digit to the left.	The individual digit value may be adjusted using the up and down keys.	Adjust the value using the Up and Down keys.	When the cursor reaches the highest accessible digit, pressing Stop and Navigate will return the cursor to the right most digit.	Press the Navigate key to return to the parameter selection menu.

6. Parameters

6.1. Parameter Set Overview

The Optidrive P2 Parameter set consists of 10 groups as follows:

- Group 0 – Read Only Monitoring Parameters
- Group 1 – Basic Configuration Parameters
- Group 2 – Extended Parameters
- Group 3 – PID Control Parameters
- Group 4 – High Performance Motor Control Parameters
- Group 5 – Field Bus Parameters
- Group 6 – Advanced Options
- Group 7 – Advanced Motor Control
- Group 8 – Application Parameters
- Group 9 – Advanced I/O Selection

When the Optidrive is reset to factory defaults, or is in its factory supplied state, only Group 1 Parameters can be accessed. In order to allow access to parameters from the higher level groups, the access code must be changed as follows.

P1-14 = P2-40 (Default setting = 101). With this setting, parameter groups 1 – 5 can be accessed, along with the first 50 parameters in Group 0.

P1-14 = P6-30 (Default setting = 201). With this setting, all parameters are accessible.

6.2. Parameter Group 1 – Basic Parameters

The basic parameter group allows the user to:

- Enter the motor nameplate information
  - P1-07 = Motor Rated Voltage
  - P1-08 = Motor Rated Current
  - P1-09 = Motor Rated Frequency
  - P1-10 = (Optionally) Motor Rated Speed
- Define the operating speed limits
  - P1-01 = Maximum Frequency or Speed
  - P1-02 = Minimum Frequency or Speed
- Define the acceleration and deceleration times used when starting and stopping the motor, or changing speed
  - P1-03 = Acceleration Time
  - P1-04 = Deceleration Time
- Select where the drive should receive it's command signals from, and determine what functions are associated with the drive control terminal inputs
  - P1-12 Selects the control source
  - P1-13 Assigns the functions to the digital inputs

These parameters will often provide enough functions to allow the user to complete basic commissioning in simple applications. The parameters are described in more detail below.

Par.	Description	Minimum	Maximum	Default	Units
P1-01	**Maximum Frequency / Speed Limit**	**P1-02**	**500.0**	**50.0 (60.0)**	**Hz / Rpm**
	Maximum output frequency or motor speed limit – Hz or rpm. If P1-10 >0, the value entered / displayed is in Rpm.				
P1-02	**Minimum Frequency / Speed Limit**	**0.0**	**P1-01**	**0.0**	**Hz / Rpm**
	Minimum speed limit – Hz or rpm. If P1-10 >0, the value entered / displayed is in Rpm.				
P1-03	**Acceleration Ramp Time**	**See Below**		**5.0 / 10.0**	**Seconds**
	Acceleration ramp time from 0 to base speed (P1-09) in seconds. FS2 & FS3 : 5.0 Seconds Default Setting, 0.01 Seconds Resolution, 600.0 Seconds Maximum. FS4 – FS7 : 10.0 Seconds Default Setting, 0.1 Seconds Resolution, 6000 Seconds Maximum.				
P1-04	**Deceleration Ramp Time**	**See Below**		**5.0 / 10.0**	**Seconds**
	Deceleration ramp time from base speed (P1-09) to standstill in seconds. When set to zero, it will coast to stop the motor. FS2 & FS3 : 5.0 Seconds Default Setting, 0.01 Seconds Resolution, 600.0 Seconds Maximum. FS4 – FS7 : 10.0 Seconds Default Setting, 0.1 Seconds Resolution, 6000.0 Seconds Maximum.				
P1-05	**Stop Mode**	**0**	**4**	**0**	**-**
	0 **Ramp**	When the enable signal is removed, the drive will ramp to stop, with the rate controlled by P1-04 as described above. In this mode, the drive brake transistor (where fitted) is disabled.			
	1 **Coast**	When the enable signal is removed, the drive output is immediately disabled, and the motor will coast (freewheel) to stop. If the load can continue to rotate due to inertia, and the drive may possibly be re-enabled whilst the motor is still rotating, the spin start function (P2-26) should be enabled. In this mode, the drive brake transistor (where fitted) is disabled.			
	2 **Ramp, brake chopper enabled**	When the enable signal is removed, the drive will ramp to stop, with the rate controlled by P1-04 as described above. The Optidrive Brake chopper is also enabled in this mode.			
	3 **Coast, brake chopper enabled**	When the enable signal is removed, the drive output is immediately disabled, and the motor will coast (freewheel) to stop. If the load can continue to rotate due to inertia, and the drive may possibly be re-enabled whilst the motor is still rotating, the spin start function (P2-26) should be enabled. The drive brake chopper is enabled in this mode, however it will only activate when required during a change in the drive frequency setpoint, and will not activate when stopping.			
	4 **AC Flux Braking**	As Option 0, but additionally, AC Flux braking is used to increase the available braking torque.			
P1-06	**Energy Optimiser**	**0**	**1**	**0**	**-**
	0 **Disabled**				
	1 **Enabled**	When enabled, the Energy Optimiser attempts to reduce the overall energy consumed by the drive and motor when operating at constant speeds and light loads. The output voltage applied to the motor is reduced. The Energy Optimiser is intended for applications where the drive may operate for some periods of time with constant speed and light motor load, whether constant or variable torque.			
P1-07	**Motor Rated Voltage / kE**	**Drive Rating Dependent**			**Volts**
	For IM motors, this parameter should be set to the rated (nameplate) voltage of the motor. For PM motors, enter the RMS Back EMF generated by the motor when operated at rated speed.				
P1-08	**Motor Rated Current**	**Drive Rating Dependent**			**Amps**
	This parameter should be set to the rated (nameplate) current of the motor.				
P1-09	**Motor Rated Frequency**	**10**	**500**	**50 (60)**	**Hz**
	This parameter should be set to the rated (nameplate) frequency of the motor.				
P1-10	**Motor Rated Speed**	**0**	**30000**	**0**	**RPM**
	This parameter can optionally be set to the rated (nameplate) rpm of the motor. When set to the default value of zero, all speed related parameters are displayed in Hz, and the slip compensation for the motor is disabled. Entering the value from the motor nameplate enables the slip compensation function, and the Optidrive display will now show motor speed in estimated rpm. All speed related parameters, such as Minimum and Maximum Speed, Preset Speeds etc. will also be displayed in Rpm. **NOTE** When the drive is operated with the optional Encoder Feedback Interface, this parameter must be set to the correct nameplate Rpm of the connected motor.				

Par.	Description			Minimum	Maximum	Default	Units
P1-11	**Boost Voltage**			**0.0**	**Drive Rating Dependent**		**%**
	Voltage boost is used to increase the applied motor voltage at low output frequencies, in order to improve low speed and starting torque. Excessive voltage boost levels may result in increased motor current and temperature, and force ventilation of the motor may be required. An automatic setting (AUto) is also possible, whereby the Optidrive will automatically adjust this parameter based on the motor parameters measured during an autotune.						
P1-12	**Primary Command Source**			**0**	**6**	**0**	**-**
	0	**Terminal Control**	The drive responds directly to signals applied to the control terminals.				
	1	**Keypad control - uni-directional**	The drive can be controlled in the forward direction only using an external or remote Keypad.				
	2	**Keypad control - bi-directional**	The drive can be controlled in the forward and reverse directions using an external or remote Keypad. Pressing the keypad START button toggles between forward and reverse.				
	3	**PID Control**	The output frequency is controlled by the internal PID controller.				
	4	**Fieldbus Mode**	Control via Modbus RTU if no fieldbus interface option is present, otherwise control is from the fieldbus option module interface.				
	5	**Slave Mode**	The drive acts as a Slave to a connected Optidrive operating in Master Mode.				
	6	**CANopen Mode**	Control via CAN bus connected to the RJ45 serial interface connector.				
P1-13	**Digital Input Function**			**0**	**21**	**1**	**-**
	Defines the function of the digital inputs depending on the control mode setting in P1-12. See section *7.1. Control Source Selection* for more information.						
P1-14	**Extended Menu Access**			**0**	**30000**	**0**	**-**
	Parameter Access Control. The following settings are applicable: P1-14 = P2-40 = 101 : Allows access to Extended Parameter Groups 0 – 5 P1-14 = P6-30 = 201 : Allows access to all parameter groups (Intended for experienced users only, usage is not described in this User Guide).						

7. Control Terminal Functions

For standard applications and operation, the basic control of the drive and functions of all drive input terminals can be configured using just two parameters, P1-12 and P1-13. P1-12 is used to define the source of all control commands and the primary speed reference source. P1-13 then allows fast selection of Analog and Digital Input functions based on a selection table.

7.1. Control Source Selection

7.1.1. P1-12 Function

P1-12 is used to select the main control source of the drive and the main speed reference according to the following table:

P1-12	Function	Control Source	Main Speed Reference	Notes
0	Terminal Control	Terminals	Analog Input 1	All control signals are applied to the control terminals. Functions are determined by P1-13 Macro setting.
1	Keypad Control (Uni-directional)	Keypad / Terminals	Motorised Pot / Keypad	When keypad mode is selected, the default operation of the drive requires the keypad Start & Stop buttons are used to control the drive. This can be changed using P2-37 to allow the drive to be started from Digital Input 1 directly.
2	Keypad Control (Bi-directional)	Keypad / Terminals	Motorised Pot / Keypad	
3	PID Control	Terminals	PID Output	Enable / Disable control of the drive is through the drive control terminal strip. Output frequency is set by the output of the PI Controller.
4	Fieldbus / Modbus RTU	Modbus RTU	Fieldbus / Modbus RTU	Control of the drive operation is through a fieldbus option module mounted in the drive option slot. If no option module is fitted, control is through the Modbus RTU interface. Digital Input 1 must be closed to allow operation.
5	Slave Mode	Master Drive	From Master	Optidrive P2 provides an inbuilt Master / Slave function. A single drive acts as the Master, and connected Slave drives will mimic the starting and stopping, along with following the output frequency, with any scaling applied. Digital Input 1 must be closed to allow operation.
6	CANopen	CAN bus	CAN bus	Control of the drive operation is through the CAN Open Interface. Digital Input 1 must be closed to allow operation.

7.1.2. Overview

Optidrive P2 uses a Macro approach to simplify the configuration of the Analog and Digital Inputs. There are two key parameters which determine the input functions and drive behaviour:

- P1-12 – Selects the main drive control source and determines how the output frequency of the drive is primarily controlled.
- P1-13 – Assigns the Macro function to the analog and digital inputs.

Additional parameters can then be used to further adapt the settings, e.g.

- P2-30 – Used to select the format of the analog signal to be connected to analog input 1, e.g. 0 – 10 Volt, 4 – 20mA.
- P2-33 – Used to select the format of the analog signal to be connected to analog input 2, e.g. 0 – 10 Volt, 4 – 20mA.
- P2-36 – Determines whether the drive should automatically start following a power on if the Enable Input is present.
- P2-37 – When Keypad Mode is selected, determines at what output frequency / speed the drive should start, following the enable command, and also whether the keypad start key must be pressed or if the Enable input alone should start the drive.

The following diagrams and tables provide an overview of the functions of each terminal macro function, and a simplified connection diagram for each.

7.1.3. Macro Function Guide

Function	Explanation
STOP	Latched Input, Open the contact to STOP the drive.
RUN	Latched input, Close the contact to Start, the drive will operate as long as the input is maintained.
FWD↻	Latched Input, selects the direction of motor rotation FORWARD.
REV↺	Latched Input, selects the direction of motor rotation REVERSE.
RUN FWD↻	Latched Input, Close to Run in the FORWARD direction, Open to STOP.
RUN REV↺	Latched Input, Close to Run in the REVERSE direction, Open to STOP.
ENABLE	Hardware Enable Input. In Keypad Mode, P2-37 determines whether the drive immediately starts, or the keypad start key must be pressed. In other modes, this input must be present before the start command is applied via the fieldbus interface.
START↥	Normally Open, Rising Edge, Close momentarily to START the drive (NC STOP Input must be maintained).
^- START -^	Simultaneously applying both inputs momentarily will START the drive (NC STOP Input must be maintained).
STOP↧	Normally Closed, Falling Edge, Open momentarily to STOP the drive.
START↥FWD↻	Normally Open, Rising Edge, Close momentarily to START the drive in the forward direction (NC STOP Input must be maintained).
START↥REV↻	Normally Open, Rising Edge, Close momentarily to START the drive in the reverse direction (NC STOP Input must be maintained).
^-FAST STOP (P2-25)-^	When both inputs are momentarily active simultaneously, the drive stops using Fast Stop Ramp Time P2-25.
FAST STOP↧ (P2-25)	Normally Closed, Falling Edge, Open momentarily to FAST STOP the drive using Fast Stop Ramp Time P2-25.
E-TRIP	Normally Closed, External Trip input. When the input opens momentarily, the drive trips showing E-trIP or Ptc-th depending on P2-33 setting. See section *4.12.2. Motor Thermistor Connection on page 32* for further information.
Analog Input AI1	Analog Input 1, signal format selected using P2-30.
Analog Input AI2	Analog Input 2, signal format selected using P2-33.
AI1 REF	Analog Input 1 provides the speed reference.
AI2 REF	Analog Input 2 provides the speed reference.
P2-0X REF	Speed reference from the selected preset speed.
PR-REF	Preset speeds P2-01 – P2-08 are used for the speed reference, selected according to other digital input status.
PI-REF	PI Control Speed Reference.
PI FB	Analog Input used to provide a Feedback signal to the internal PI controller.
KPD REF	Keypad Speed Reference selected.
INC SPD↑	Normally Open, Close the input to Increase the motor speed.
DEC SPD↓	Normally Open, Close input to Decrease motor speed.
FB REF	Selected speed reference from Fieldbus (Modbus RTU / CAN Open / Master depending on P1-12 setting).
(NO)	Input is Normally Open, Close momentarily to activate the function.
(NC)	Input is Normally Closed, Open momentarily to activate the function.
DECEL P1-04	During deceleration and stopping, Deceleration Ramp 1 (P1-04) is used.
DECEL P8-11	During deceleration and stopping, Deceleration Ramp 2 (P8-11) is used (Requires Advanced Parameter Access, see section *6.1. Parameter Set Overview on page 43*.

7.2. Digital Input Configuration Parameter P1-13

P1-13	DI1		DI2		DI3		AI1 / DI4		AI2 / DI5	
State	**0**	**1**	**0**	**1**	**0**	**1**	**0**	**1**	**0**	**1**
0	User defined									
1	STOP	RUN	FWD ↻	REV ↺	P1-12 REF	P2-01	Analog Input AI1		P2-01	P2-02
2	STOP	RUN	FWD ↻	REV ↺	**DI3**	**DI4**	**DI5**		**Preset Speed**	
					0	0	0		P2-01 REF	
					1	0	0		P2-02 REF	
					0	1	0		P2-03 REF	
					1	1	0		P2-04 REF	
					0	0	1		P2-05 REF	
					1	0	1		P2-06 REF	
					0	1	1		P2-07 REF	
					1	1	1		P2-08 REF	
3	STOP	RUN	FWD ↻	REV ↺	P1-12 REF	P2-01 REF	Analog Input AI1		Analog Input AI2	
4	STOP	RUN	FWD ↻	REV ↺	P1-12 REF	P2-01 REF	Analog Input AI1		DECEL P1-04	DECEL P8-11
5	STOP	RUN	FWD ↻	REV ↺	P1-12 REF	AI2 REF	Analog Input AI1		Analog Input AI2	
6	STOP	RUN	FWD ↻	REV ↺	P1-12 REF	P2-01 REF	Analog Input AI1		E-TRIP	OK
7	STOP	RUN	FWD ↻	REV ↺	**DI3**		**DI4**	**Preset Speed**	E-TRIP	OK
					Off		Off	P2-01 REF		
					On		Off	P2-02 REF		
					Off		On	P2-03 REF		
					On		On	P2-04 REF		
8	STOP	RUN	FWD ↻	REV ↺	**DI3**		**DI4**	**Preset Speed**	DECEL P1-04	DECEL P8-11
					Off		Off	P2-01 REF		
					On		Off	P2-02 REF		
					Off		On	P2-03 REF		
					On		On	P2-04 REF		
9	STOP	RUN	FWD ↻	REV ↺	**DI3**		**DI4**	**Preset Speed**	P1-12 REF	PR-REF
					Off		Off	P2-01 REF		
					On		Off	P2-02 REF		
					Off		On	P2-03 REF		
					On		On	P2-04 REF		
10	STOP	RUN	FWD ↻	REV ↺	(NO)	INC SPD ↑	(NO)	DEC SPD ↓	P1-12 REF[1]	P2-01-REF
11	STOP	RUN FWD ↻	STOP	RUN REV ↺	P1-12 REF	PR-REF	Analog Input AI1		P2-01 REF	P2-02 REF
12	STOP	RUN FWD ↻	STOP	RUN REV ↺	**DI3**		**DI4**	**DI5**	**Preset Speed**	
					Off		Off	Off	P2-01 REF	
					On		Off	Off	P2-02 REF	
					Off		On	Off	P2-03 REF	
					On		On	Off	P2-04 REF	
					Off		Off	On	P2-05 REF	
					On		Off	On	P2-06 REF	
					Off		On	On	P2-07 REF	
					On		On	On	P2-08 REF	
13	STOP	RUN FWD ↻	STOP	RUN REV ↺	P1-12 REF	P2-01 REF	Analog Input AI1		Analog Input AI2	
14	STOP	RUN FWD ↻	STOP	RUN REV ↺	P1-12 REF	P2-01 REF	Analog Input AI1		DECEL P1-04	DECEL P8-11
15	STOP	RUN FWD ↻	STOP	RUN REV ↺	P1-12 REF	AI2-REF	Analog Input AI1		Analog Input AI2	
16	STOP	RUN FWD ↻	STOP	RUN REV ↺	P1-12 REF	P2-01 REF	Analog Input AI1		E-TRIP	OK

P1-13	DI1		DI2		DI3		AI1 / DI4		AI2 / DI5	
State	**0**	**1**	**0**	**1**	**0**	**1**	**0**	**1**	**0**	**1**
17	STOP	RUN FWD ↻	STOP	RUN REV ↺	**DI3**		**DI4**	**Preset Speed**	E-TRIP	OK
					Off		Off	P2-01 REF		
					On		Off	P2-02 REF		
					Off		On	P2-03 REF		
					On		On	P2-04 REF		
18	STOP	RUN FWD ↻	STOP	RUN REV ↺	**DI3**		**DI4**	**Preset Speed**	DECEL P1-04	DECEL P8-11
					Off		Off	P2-01 REF		
					On		Off	P2-02 REF		
					Off		On	P2-03 REF		
					On		On	P2-04 REF		
19	STOP	RUN FWD ↻	STOP	RUN REV ↺	**DI3**		**DI4**	**Preset Speed**	P1-12 REF	PR-REF
					Off		Off	P2-01 REF		
					On		Off	P2-02 REF		
					Off		On	P2-03 REF		
					On		On	P2-04 REF		
20	STOP	RUN FWD ↻	STOP	RUN REV ↺	(NO)	INC SPD ↑	(NO)	DEC SPD ↓	P1-12 REF[1]	P2-01-REF
21	(NO)	START ↥ FWD ↻	STOP ↧	(NC)	(NO)	START ↥ REV ↺	Analog Input AI1		P1-12 REF	P2-01-REF

1) When P1-12 = 0 and P 1-13 = 10 or 20, the Motorised Pot / Keypad reference is automatically selected to be the Selected Speed Reference.

7.3. Example Connection Schematics

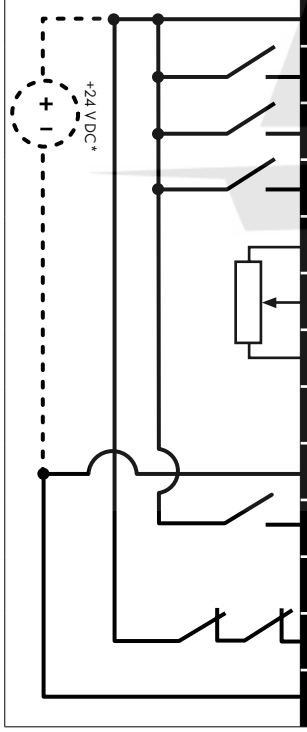

P1-13 Setting:		1	4	11	14
1	+24V DC	+24V DC	+24V DC	+24V DC	+24V DC
2	DI 1	Disable / Enable	Disable / Enable	Run Forward	Run Forward
3	DI 2	Forward / Reverse	Forward / Reverse	Run Reverse	Run Reverse
4	DI 3	P1-12 Reference / PR Reference	P1-12 Reference / PR Reference	P1-12 Reference / PR Reference	P1-12 Reference / PR Reference
5	+10V DC	+10V DC	+10V DC	+10V DC	+10V DC
6	AI 1	Analog Input 1	Analog Input 1	Analog Input 1	Analog Input 1
7	0V / COM	0V / COM	0V / COM	0V / COM	0V / COM
8	AO 1	Analog Output 1 (Motor Speed)	Analog Output 1 (Motor Speed)	Analog Output 1 (Motor Speed)	Analog Output 1 (Motor Speed)
9	0V / COM	0V / COM	0V / COM	0V / COM	0V / COM
10	DI 5	Preset Speed Select (P2-01 / P2-02)	Dec. Ramp Select (P1-04 / P8-11)	Preset Speed Select (P2-01 / P2-02)	Dec. Ramp Select (P1-04 / P8-11)
11	AO 2	Analog Output 2 (Motor Current)	Analog Output 2 (Motor Current)	Analog Output 2 (Motor Current)	Analog Output 2 (Motor Current)
12	STO+	STO+	STO+	STO+	STO+
13	STO-	STO-	STO-	STO-	STO-

NOTE * Optional external 24V DC power supply

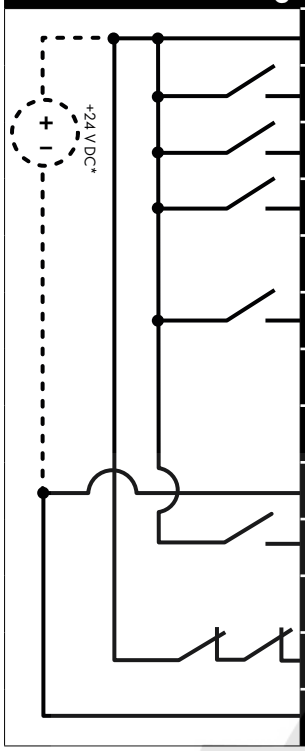

P1-13 Setting:		2	8	9	12	18	19
1	+24V DC	+24V DC	+24V DC	+24V DC	+24V DC	+24V DC	+24V DC
2	DI 1	Disable / Enable	Disable / Enable	Disable / Enable	Run Forward	Run Forward	Run Forward
3	DI 2	Forward / Reverse	Forward / Reverse	Forward / Reverse	Run Reverse	Run Reverse	Run Reverse
4	DI 3	Preset Speed Select BIT 0	Preset Speed Select BIT 0	Preset Speed Select BIT 0	Preset Speed Select BIT 0	Preset Speed Select BIT 0	Preset Speed Select BIT 0
5	+10V DC	+10V DC	+10V DC	+10V DC	+10V DC	+10V DC	+10V DC
6	DI 4	Preset Speed Select BIT 1	Preset Speed Select BIT 1	Preset Speed Select BIT 1	Preset Speed Select BIT 1	Preset Speed Select BIT 1	Preset Speed Select BIT 1
7	0V / COM	0V / COM	0V / COM	0V / COM	0V / COM	0V / COM	0V / COM
8	AO 1	Analog Output 1 (Motor Speed)	Analog Output 1 (Motor Speed)	Analog Output 1 (Motor Speed)	Analog Output 1 (Motor Speed)	Analog Output 1 (Motor Speed)	Analog Output 1 (Motor Speed)
9	0V / COM	0V / COM	0V / COM	0V / COM	0V / COM	0V / COM	0V / COM
10	DI 5	Preset Speed Select BIT 2	Dec. Ramp Select (P1-04 / P8-11)	P1-12 Reference / Preset Ref	Dec. Ramp Select (P1-04 / P8-11)	Dec. Ramp Select (P1-04 / P8-11)	P1-12 Reference / Preset Ref
11	AO 2	Analog Output 2 (Motor Current)	Analog Output 2 (Motor Current)	Analog Output 2 (Motor Current)	Analog Output 2 (Motor Current)	Analog Output 2 (Motor Current)	Analog Output 2 (Motor Current)
12	STO+	STO+	STO+	STO+	STO+	STO+	STO+
13	STO-	STO-	STO-	STO-	STO-	STO-	STO-

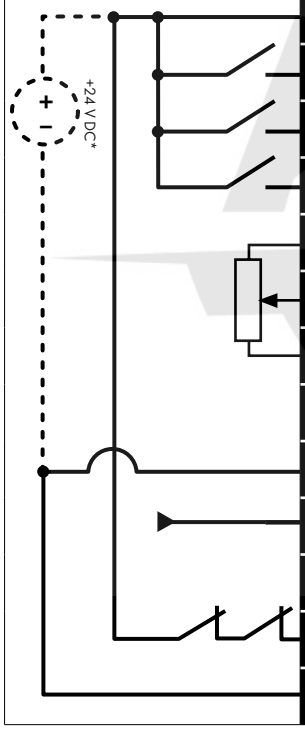

P1-13 Setting:		3	5	13	15
1	+24V DC	+24V DC	+24V DC	+24V DC	+24V DC
2	DI 1	Disable / Enable	Disable / Enable	Run Forward	Run Forward
3	DI 2	Forward / Reverse	Forward / Reverse	Run Reverse	Run Reverse
4	DI 3	P1-12 Reference / P2-01 Reference	P1-12 Reference / AI 2 Reference	P1-12 Reference / P2-01 Reference	P1-12 Reference / AI 2 Reference
5	+10V DC	+10V DC	+10V DC	+10V DC	+10V DC
6	AI 1 / DI 4	Analog Input 1	Analog Input 1	Analog Input 1	Analog Input 1
7	0V / COM	0V / COM	0V / COM	0V / COM	0V / COM
8	AO 1	Analog Output 1 (Motor Speed)	Analog Output 1 (Motor Speed)	Analog Output 1 (Motor Speed)	Analog Output 1 (Motor Speed)
9	0V / COM	0V / COM	0V / COM	0V / COM	0V / COM
10	AI 2 / DI 5	Analog Input 2	Analog Input 2	Analog Input 2	Analog Input 2
11	AO 2	Analog Output 2 (Motor Current)	Analog Output 2 (Motor Current)	Analog Output 2 (Motor Current)	Analog Output 2 (Motor Current)
12	STO+	STO+	STO+	STO+	STO+
13	STO-	STO-	STO-	STO-	STO-

NOTE * Optional external 24V DC power supply

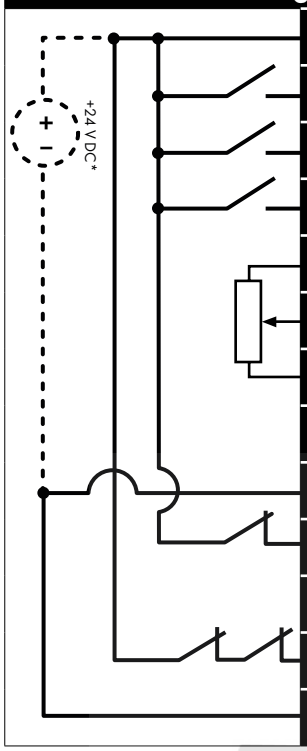

P1-13 Setting:		6	16
1	+24V DC	+24V DC	+24V DC
2	DI 1	Disable / Enable	Run Forward
3	DI 2	Forward / Reverse	Run Reverse
4	DI 3	P1-12 Reference / P2-01 Reference	P1-12 Reference / P2-01 Reference
5	+10V DC	+10V DC	+10V DC
6	AI 1	Analog Input 1	Analog Input 1
7	0V / COM	0V / COM	0V / COM
8	AO 1	Analog Output 1 (Motor Speed)	Analog Output 1 (Motor Speed)
9	0V / COM	0V / COM	0V / COM
10	DI 5	E-trip	E-trip
11	AO 2	Analog Output 2 (Motor Current)	Analog Output 2 (Motor Current)
12	STO+	STO+	STO+
13	STO-	STO-	STO-

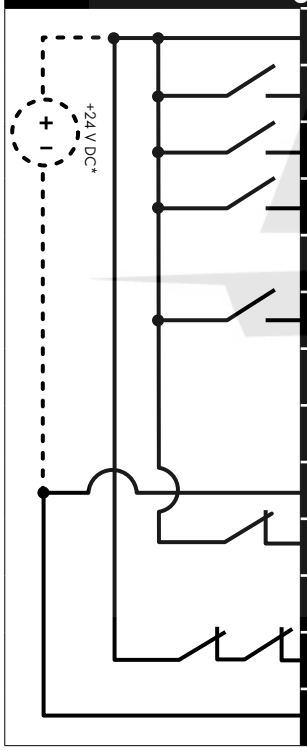

P1-13 Setting:		7	17
1	+24V DC	+24V DC	+24V DC
2	DI 1	Disable / Enable	Run Forward
3	DI 2	Forward / Reverse	Run Reverse
4	DI 3	Preset Speed Select BIT 0	Preset Speed Select BIT 0
5	+10V DC	+10V DC	+10V DC
6	DI 1	Preset Speed Select BIT 1	Preset Speed Select BIT 1
7	0V / COM	0V / COM	0V / COM
8	AO 1	Analog Output 1 (Motor Speed)	Analog Output 1 (Motor Speed)
9	0V / COM	0V / COM	0V / COM
10	DI 5	External trip (NC)	External trip (NC)
11	AO 2	Analog Output 2 (Motor Current)	Analog Output 2 (Motor Current)
12	STO+	STO+	STO+
13	STO-	STO-	STO-

NOTE * Optional external 24V DC power supply

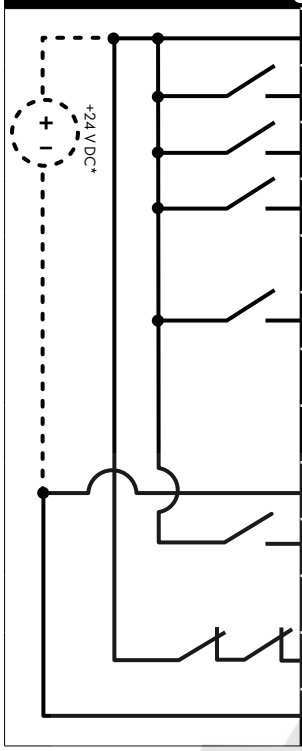

P1-13 Setting:		10	20
1	+24V DC	+24V DC	+24V DC
2	DI 1	Disable / Enable	Run Forward
3	DI 2	Forward / Reverse	Run Reverse
4	DI 3	Increase Speed	Increase Speed
5	+10V DC	+10V DC	+10V DC
6	DI 4	Decrease Speed	Decrease Speed
7	0V / COM	0V / COM	0V / COM
8	AO 1	Analog Output 1 (Motor Speed)	Analog Output 1 (Motor Speed)
9	0V / COM	0V / COM	0V / COM
10	DI 5	P1-12 Reference / P2-01 Reference	P1-12 Reference / P2-01 Reference
11	AO 2	Analog Output 2 (Motor Current)	Analog Output 2 (Motor Current)
12	STO+	STO+	STO+
13	STO-	STO-	STO-

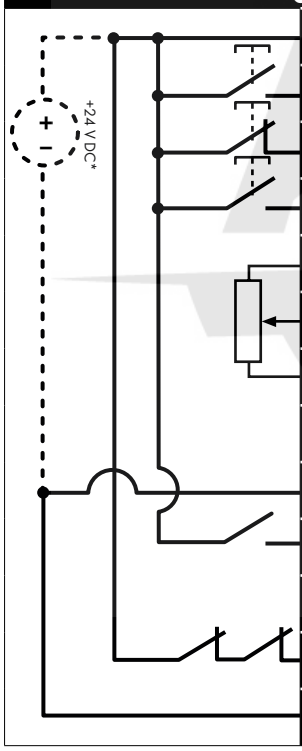

P1-13 Setting:		21
1	+24V DC	+24V DC
2	DI 1	NO Push Start Forward
3	DI 2	NC Push Stop
4	DI 3	NO Push Start Reverse
5	+10V DC	+10V DC
6	AI 1	Analog Input 1
7	0V / COM	0V / COM
8	AO 1	Analog Output 1 (Motor Speed)
9	0V / COM	0V / COM
10	DI 5	P1-12 Reference / P2-01 Reference
11	AO 2	Analog Output 2 (Motor Current)
12	STO+	STO+
13	STO-	STO-

NOTE * Optional external 24V DC power supply

8. Extended Parameters

8.1. Parameter Group 2 - Extended Parameters

Par	Parameter Name	Minimum	Maximum	Default	Units
P2-01	**Preset Jog Frequency / Speed 1**	**P1-02**	**P1-01**	**5.0**	**Hz / Rpm**
P2-02	**Preset Jog Frequency / Speed 2**	**P1-02**	**P1-01**	**10.0**	**Hz / Rpm**
P2-03	**Preset Jog Frequency / Speed 3**	**P1-02**	**P1-01**	**25.0**	**Hz / Rpm**
P2-04	**Preset Jog Frequency / Speed 4**	**P1-02**	**P1-01**	**50.0 (60.0)**	**Hz / Rpm**
P2-05	**Preset Jog Frequency / Speed 5**	**P1-02**	**P1-01**	**0.0**	**Hz / Rpm**
P2-06	**Preset Jog Frequency / Speed 6**	**P1-02**	**P1-01**	**0.0**	**Hz / Rpm**
P2-07	**Preset Jog Frequency / Speed 7**	**P1-02**	**P1-01**	**0.0**	**Hz / Rpm**
P2-08	**Preset Jog Frequency / Speed 8**	**P1-02**	**P1-01**	**0.0**	**Hz / Rpm**
	Preset Speeds / Frequencies selected by digital inputs depending on the setting of P1-13. If P1-10 = 0, the values are entered as Hz. If P1-10 > 0, the values are entered as Rpm. Setting a negative value will reverse the direction of motor rotation.				
P2-09	**Skip Frequency Center Point**	**P1-02**	**P1-01**	**0.0**	**Hz / Rpm**
P2-10	**Skip Frequency Band Width**	**0.0**	**P1-01**	**0.0**	**Hz / Rpm**
	The Skip Frequency function is used to avoid the Optidrive operating at a certain output frequency, for example at a frequency which causes mechanical resonance in a particular machine. Parameter P2-09 defines the centre point of the skip frequency band, and is used conjunction with P2-10. The Optidrive output frequency will ramp through the defined band at the rates set in P1-03 and P1-04 respectively, and will not hold any output frequency within the defined band. If the frequency reference applied to the drive is within the band, the Optidrive output frequency will remain at the upper or lower limit of the band.				
P2-11	**Analog Output 1 Function (Terminal 8)**	**0**	**12**	**8**	**-**

Digital Output Mode. Logic 1 = +24V DC		
0	**Drive running**	Logic 1 when the Optidrive is enabled (Running).
1	**Drive healthy**	Logic 1 When no Fault condition exists on the drive.
2	**At speed**	Logic 1 when the output frequency matches the setpoint frequency.
3	**Motor speed > 0**	Logic 1 when the motor runs above zero speed.
4	**Motor speed >= limit**	Logic 1 when the motor speed exceeds the adjustable limit.
5	**Motor current >= limit**	Logic 1 when the motor current exceeds the adjustable limit.
6	**Motor torque >= limit**	Logic when the motor torque exceeds the adjustable limit.
7	**Analog input 2 >= limit**	Logic when the signal applied to the Analog Input 2 exceeds the adjustable limit.

NOTE When using settings 4 – 7, parameters P2-16 and P2-17 must be used together to control the behaviour. The output will switch to Logic 1 when the selected signal exceeds the value programmed in P2-16, and return to Logic 0 when the signal falls below the value programmed in P2-17.

Analog Output Mode		
8	**Motor speed**	0 to P1-01.
9	**Motor current**	0 to 200% of P1-08.
10	**Motor torque**	0 to 200% of motor rated torque.
11	**Motor power**	0 to 150% of drive rated power.
12	**PID Output**	Output from the internal PID Controller, 0 – 100%.

P2-12	**Analog Output 1 Format**	See Below	U 0-10	-
U 0-10	0 to10V			
U 10-0	10 to 0V			
A 0-20	0 to 20mA			
A 20-0	20 to 0mA			
A 4-20	4 to 20mA			
A 20-4	20 to 4mA			

Par	Parameter Name			Minimum	Maximum	Default	Units
P2-13	**Analog Output 2 Function (Terminal 11)**			**0**	**12**	**9**	**-**
	Digital Output Mode. Logic 1 = +24V DC						
	0	**Drive running**	Logic 1 when the Optidrive is enabled (Running).				
	1	**Drive healthy**	Logic 1 when no Fault condition exists on the drive.				
	2	**At speed**	Logic 1 when the output frequency matches the setpoint frequency.				
	3	**Motor speed > 0**	Logic 1 when the motor runs above zero speed.				
	4	**Motor speed >= limit**	Logic 1 when the motor speed exceeds the adjustable limit.				
	5	**Motor current >= limit**	Logic 1 when the motor current exceeds the adjustable limit.				
	6	**Motor torque >= limit**	Logic when the motor torque exceeds the adjustable limit.				
	7	**Analog input 2 >= limit**	Logic when the signal applied to the Analog Input 2 exceeds the adjustable limit.				
	NOTE When using settings 4 – 7, parameters P2-19 and P2-20 must be used together to control the behaviour. The output will switch to Logic 1 when the selected signal exceeds the value programmed in P2-19, and return to Logic 0 when the signal falls below the value programmed in P2-20.						
	Analog Output Mode						
	8	**Motor speed**	0 to P1-01.				
	9	**Motor current**	0 to 200% of P1-08.				
	10	**Motor torque**	0 to 200% of motor rated torque.				
	11	**Motor power**	0 to 150% of drive rated power.				
	12	**PID output**	Output from the internal PID Controller, 0 – 100%.				
P2-14	**Analog Output 2 Format**			See Below		U 0-10	-
	U 0-10	0 to 10V					
	U 10-0	10 to 0V					
	A 0-20	0 to 20mA					
	A 20-0	20 to 0mA					
	A 4-20	4 to 20mA					
	A 20-4	20 to 4mA					
P2-15	**Relay 1 Function**			**0**	**14**	**1**	**-**
	Setting	**Function**	**Logic 1 when**				
	0	**Drive running**	The Optidrive is enabled (Running).				
	1	**Drive healthy**	No fault or trip condition exists on the drive.				
	2	**At speed**	Output frequency matches the setpoint frequency.				
	3	**Motor speed > 0**	The motor runs above zero speed.				
	4	**Motor speed >= limit**	The motor speed exceeds the adjustable limit.				
	5	**Motor current >= limit**	The motor current exceeds the adjustable limit.				
	6	**Motor torque >= limit**	The motor torque exceeds the adjustable limit.				
	7	**Analog input 2 >= limit**	The signal applied to the Analog Input 2 exceeds the adjustable limit.				
	8	**Reserved**	No Function.				
	9	**Reserved**	No Function.				
	10	**Maintenance due**	The internally programmable maintenance timer has elapsed.				
	11	**Drive ready to run**	0 to 150% of drive rated power.				
	12	**Drive tripped**	The drive is not tripped, the STO circuit is closed, the mains supply is present and the hardware enable input present (Digital Input 1 unless changed by the user).				
	13	**STO status**	When both STO inputs are present and the drive is able to be operated.				
	14	**PID error >= limit**	The PID Error (difference between setpoint and feedback) is greater than or equal to the programmed limit.				
	NOTE When using settings 4 – 7 and 14, parameters P2-16 and P2-17 must be used together to control the behaviour. The output will switch to Logic 1 when the selected signal exceeds the value programmed in P2-16, and return to Logic 0 when the signal falls below the value programmed in P2-17.						

Par	Parameter Name	Minimum	Maximum	Default	Units
P2-16	**Relay 1 / Analog Output 1 Upper Limit**	**P2-17**	**200.0**	**100.0**	**%**
P2-17	**Relay 1 / Analog Output 1 Lower Limit**	**0.0**	**P2-16**	**0.0**	**%**
	Used in conjunction with some settings of Parameters P2-11 & P2-15.				
P2-18	**Relay 2 Function**	**0**	**14**	**0**	**-**

Setting	Function	Logic 1 when
0	**Drive running**	The Optidrive is enabled (Running).
1	**Drive healthy**	No fault or trip condition exists on the drive.
2	**At speed**	Output frequency matches the setpoint frequency.
3	**Motor speed > 0**	The motor runs above zero speed.
4	**Motor speed >= limit**	The motor speed exceeds the adjustable limit.
5	**Motor current >= limit**	The motor current exceeds the adjustable limit.
6	**Motor torque >= limit**	The motor torque exceeds the adjustable limit.
7	**Analog input 2 >= limit**	The signal applied to the Analog Input 2 exceeds the adjustable limit.
8	**Hoist brake control**	Enables Hoist Mode. The Output relay may be used to control the motor holding brake. Refer to your Invertek Drives Sales Partner for further information.
9	**Reserved**	No Function.
10	**Maintenance due**	The internally programmable maintenance timer has elapsed.
11	**Drive ready to run**	0 to 150% of drive rated power.
12	**Drive tripped**	The drive is not tripped, the STO circuit is closed, the mains supply is present and the hardware enable input present (Digital Input 1 unless changed by the user).
13	**STO status**	When both STO inputs are present and the drive is able to be operated.
14	**PID error >= limit**	The PID Error (difference between setpoint and feedback) is greater than or equal to the programmed limit.

NOTE When using settings 4 – 7 and 14, parameters P2-16 and P2-17 must be used together to control the behaviour. The output will switch to Logic 1 when the selected signal exceeds the value programmed in P2-16, and return to Logic 0 when the signal falls below the value programmed in P2-17.

P2-19	**Relay 2 / Analog Output 2 Upper Limit**	**P2-20**	**200.0**	**100.0**	**%**
P2-20	**Relay 2 / Analog Output 2 Lower Limit**	**0.0**	**P2-19**	**0.0**	**%**
	Used in conjunction with some settings of Parameters P2-13 & P2-18.				
P2-21	**Display Scaling Factor**	**-30.000**	**30.000**	**0.000**	**-**
P2-22	**Display Scaling Source**	**0**	**3**	**0**	**-**

P2-21 & P2-22 allow the user to program the Optidrive to display an alternative output unit scaled from an existing parameter, e.g. to display conveyer speed in metres per second based on the output frequency. This function is disabled if P2-21 is set to 0.

If P2-21 is set >0, the variable selected in P2-22 is multiplied by the factor entered in P2-21, and displayed whilst the drive is running, with a 'c' to indicate the customer scaled units.

P2-22 Options		Scaled Value is
0	**Motor Speed**	If P1-10 = 0, Output Frequency (Hz) x Scaling Factor If P1-10 > 0, Motor RPM x Scaling Factor
1	**Motor Current**	Motor Amps x Scaling Factor
2	**Analog Input 2**	Analog Input 2 % (P0-02) x Scaling Factor
3	**P0-80 Value**	P0-80 Value x Scaling Factor

P2-23	**Zero Speed Holding Time**	**0.0**	**60.0**	**0.2**	**Seconds**
	Determines the time for which the drive output frequency is held at zero when stopping, before the drive output is disabled.				
P2-24	**Effective Switching Frequency**	**Drive Rating Dependent**			**kHz**
	Effective power stage switching frequency. The range of settings available and factory default parameter setting depend on the drive power and voltage rating. Higher frequencies reduce the audible 'ringing' noise from the motor, and improve the output current waveform, at the expense of increased drive losses.				
P2-25	**Fast Decel Ramp Time**	**0.00**	**240.0**	**0.00**	**Seconds**

This parameter allows an alternative deceleration ramp down time to be programmed into the Optidrive, which can be selected by digital inputs (dependent on the setting of P1-13) or selected automatically in the case of a mains power loss if P2-38 = 2.

When set to 0.0, the drive will coast to stop.

Par	Parameter Name		Minimum	Maximum	Default	Units
P2-26	**Spin Start Enable**		**0**	**2**	**0**	**-**
	0	**Disabled**	Spin Start is not active. This setting should be used for all applications where the motor is always stationary before the drive is enabled.			
	1	**Enabled**	When enabled, on start up the drive will attempt to determine if the motor is already rotating, and will begin to control the motor from its current speed. A short delay may be observed when starting motors which are not turning.			
	2	**Enabled on trip, brown out, coast**	Spin start is active only following the listed conditions, otherwise spin start is disabled.			
P2-27	**Standby Mode Timer**		**0.0**	**250.0**	**0.0**	**Seconds**
	This parameter defines the time period, whereby if the drive operates at the frequency / speed set in P3-14 (Standby speed threshold) for greater than the set time period, the Optidrive output will be disabled, and the display will show StndbY. The function is disabled if P2-27 = 0.0.					
P2-28	**Slave Speed Scaling Control**		**0**	**3**	**0**	**-**
	Active in Keypad mode (P1-12 = 1 or 2) and Slave mode (P1-12=5) only. The keypad reference can be multiplied by a preset scaling factor or adjusted using an analog trim or offset.					
	0	**Disabled (No Scaling)**				
	1	**Master Speed * P2-29**				
	2	**(Master Speed * P2-29) + analog input 1**				
	3	**(Master Speed * P2-29) * analog input 1**				
P2-29	**Slave Speed Scaling Factor**		**-500.0**	**500.0**	**100.0**	**%**
	Used in conjunction with P2-28.					
P2-30	**Analog Input 1 (Terminal 6) Format**		See Below		U 0-10	-
	Setting	**Signal Format**				
	U 0-10	0 to 10 Volt Signal (Uni-polar)				
	U 10-0	10 to 0 Volt Signal (Uni-polar)				
	-10-10	-10 to +10 Volt Signal (Bi-polar)				
	A 0-20	0 to 20mA Signal				
	t 4-20	4 to 20mA Signal, the Optidrive will trip and show the fault code 4-20F if the signal level falls below 3mA				
	r 4-20	4 to 20mA Signal, the Optidrive will ramp to Preset Speed 8 (P2-08) if the signal level falls below 3mA				
	t 20-4	20 to 4mA Signal, the Optidrive will trip and show the fault code 4-20F if the signal level falls below 3mA				
	r 20-4	20 to 4mA Signal, the Optidrive will ramp to Preset Speed 8 (P2-08) if the signal level falls below 3mA				
P2-31	**Analog Input 1 Scaling**		**0.0**	**2000.0**	**100.0**	**%**
	Scales the analog input by this factor, e.g. if P2-30 is set for 0 – 10V, and the scaling factor is set to 200.0%, a 5 volt input will result in the drive running at maximum speed (P1-01).					
P2-32	**Analog Input 1 Offset**		**-500.0**	**500.0**	**0.0**	**%**
	Sets an offset, as a percentage of the full scale range of the input, which is applied to the analog input signal.					
P2-33	**Analog Input 2 (Terminal 10) Format**		See Below		U 0-10	-
	Setting	**Signal Format**				
	U 0-10	0 to 10 Volt Signal (Uni-polar)				
	U 10-0	10 to 0 Volt Signal (Uni-polar)				
	Ptc-th	Motor PTC Thermistor Input				
	A 0-20	0 to 20mA Signal				
	t 4-20	4 to 20mA Signal, the Optidrive will trip and show the fault code 4-20F if the signal level falls below 3mA				
	r 4-20	4 to 20mA Signal, the Optidrive will ramp to Preset Speed 8 (P2-08) if the signal level falls below 3mA				
	t 20-4	20 to 4mA Signal, the Optidrive will trip and show the fault code 4-20F if the signal level falls below 3mA				
	r 20-4	20 to 4mA Signal, the Optidrive will ramp to Preset Speed 8 (P2-08) if the signal level falls below 3mA				
P2-34	**Analog Input 2 Scaling**		**0.0**	**2000.0**	**100.0**	**%**
	Scales the analog input by this factor, e.g. if P2-30 is set for 0 – 10V, and the scaling factor is set to 200.0%, a 5 volt input will result in the drive running at maximum speed (P1-01).					

Par	Parameter Name	Minimum	Maximum	Default	Units
P2-35	**Analog Input 2 Offset**	**-500.0**	**500.0**	**0.0**	**%**
	Sets an offset, as a percentage of the full scale range of the input, which is applied to the analog input signal.				
P2-36	**Start Mode Select / Automatic Restart**	**See Below**		Auto-0	**%**
	Defines the behaviour of the drive relating to the enable digital input and also configures the Automatic Restart function.				
	EdGE-r — Following Power on or reset, the drive will not start if Digital Input 1 remains closed. The Input must be closed after a power on or reset to start the drive.				
	Auto-0 — Following a Power On or Reset, the drive will automatically start if Digital Input 1 is closed.				
	Auto-1, Auto-2, Auto-3, Auto-4, Auto-5 — Following a trip, the drive will make up to 5 attempts to restart at 20 second intervals. The drive must be powered down to reset the counter. The numbers of restart attempts are counted, and if the drive fails to start on the final attempt, the drive will fault with, and will require the user to manually reset the fault.				
	⚠ **DANGER! "Auto" modes allow the drive to Auto-start, therefore the impact on system/Personnel safety needs to be considered.**				
P2-37	**Keypad Start Mode**	**0**	**7**	**1**	**-**
	This parameter is only active when P1-12 = 1 or 2. When settings 0 to 3 are used, the drive must be started by pressing the Start key on the keypad. When settings 4 – 7 are used, the drive starting is controlled by the enable digital input.				
	0 — **Minimum speed, keypad start** — Following a stop and restart, the drive will always initially run at the minimum speed P1-02.				
	1 — **Previous speed, keypad start** — Following a stop and restart, the drive will return to the last keypad setpoint speed used prior to stopping.				
	2 — **Current speed, keypad start** — Where the Optidrive is configured for multiple speed references (typically Hand / Auto control or Local / Remote control), when switched to keypad mode by a digital input, the drive will continue to operate at the last operating speed.				
	3 — **Preset speed 8, keypad start** — Following a stop and restart, the Optidrive will always initially run at Preset Speed 8 (P2-08).				
	4 — **Minimum speed, terminal start** — Following a stop and restart, the drive will always initially run at the minimum speed P1-02.				
	5 — **Previous speed, terminal start** — Following a stop and restart, the drive will return to the last keypad setpoint speed used prior to stopping.				
	6 — **Current speed, terminal start** — Where the Optidrive is configured for multiple speed references (typically Hand / Auto control or Local / Remote control), when switched to keypad mode by a digital input, the drive will continue to operate at the last operating speed.				
	7 — **Preset speed 8, terminal start** — Following a stop and restart, the Optidrive will always initially run at Preset Speed 8 (P2-08).				
P2-38	**Mains Loss Stop / Ride Through**	**0**	**3**	**0**	**-**
	0 — **Mains Loss Ride Through** — The Optidrive will attempt to continue operating by recovering energy from the load motor. Providing that the mains loss period is short, and sufficient energy can be recovered before the drive control electronics power off, the drive will automatically restart on return of mains power.				
	1 — **Coast To Stop** — The Optidrive will immediately disable the output to the motor, allowing the load to coast or free wheel. When using this setting with high inertia loads, the Spin Start function (P2-26) may need to be enabled.				
	2 — **Fast Ramp To Stop** — The drive will ramp to stop at the rate programmed in the 2nd deceleration time P2-25.				
	3 — **DC bus supply mode** — This mode is intended to be used when the drive is powered directly via the +DC and –DC Bus connections. Refer to your Invertek Sales Partner for further details.				
P2-39	**Parameter Lock**	**0**	**1**	**0**	**-**
	0 — **Unlocked** — All parameters can be accessed and changed.				
	1 — **Locked** — Parameter values can be displayed, but cannot be changed.				
P2-40	**Extended Menu Access Code**	**0**	**9999**	**101**	**-**
	Defines the access code which must be entered in P1-14 to access parameter groups above Group 1.				

8.2. Parameter Group 3 – PID Control

8.2.1. Overview

Optidrive P2 provides an internal PID controller. Parameters for configuration of the PID controller are located together in Group 3. For simple applications, the user needs to only define the setpoint source (P3-05 to select the source or P3-06 for a fixed setpoint), feedback source (P3-10) and adjust the P Gain (P3-01), I time (P3-02) and optionally the differential time (P3-03).

The PID operation is uni-directional, and all signals are treated as 0 – 100% to provide a simple, intuitive operating format.

8.2.2. Parameter List

Par	Parameter Name		Minimum	Maximum	Default	Units
P3-01	**PID Proportional Gain**		**0.0**	**30.0**	**1.0**	**-**
	PID Controller Proportional Gain. Higher values provide a greater change in the drive output frequency in response to small changes in the feedback signal. Too high a value can cause instability.					
P3-02	**PID Integral Time Constant**		**0.0**	**30.0**	**1.0**	**s**
	PID Controller Integral Time. Larger values provide a more damped response for systems where the overall process responds slowly.					
P3-03	**PID Differential Time Constant**		**0.00**	**1.00**	**0.00**	**s**
	PID Differential Time Constant.					
P3-04	**PID Operating Mode**		**0**	**1**	**0**	**-**
	0	**Direct**	Use this mode if an increase in the motor speed should result in an increase in the feedback signal.			
	1	**Inverse**	Use this mode if an increase in the motor speed should result in a decrease in the feedback signal.			
P3-05	**PID Reference Select**		**0**	**2**	**0**	**-**
	0	**Digital preset**	P3-06 is used.			
	1	**Analog Input 1**	Analog Input 1 as displayed in P0-01 is used.			
	2	**Analog Input 2**	Analog Input 2 as displayed in P0-02 is used.			
P3-06	**PID Digital Reference Value**		**0.0**	**100.0**	**0.0**	**%**
	When P3-05 = 0, this parameter sets the preset digital reference (setpoint) used for the PID Controller. Where the feedback is provided from a transducer such as a pressure transducer or level measurement, this represents the percentage of the pressure range (e.g. for a 0 – 10 Bar transducer, 4 bar = 40%) or the level.					
P3-07	**PID Output Upper Limit**		**P3-08**	**100.0**	**100.0**	**%**
	Limits the maximum value output from the PID controller.					
P3-08	**PID Output Lower Limit**		**0.0**	**P3-07**	**0.0**	**%**
	Limits the minimum output from the PID controller.					
P3-09	**PID Output Limit Select**		**0**	**3**	**0**	**-**
	0	**Digital Output Limits**	The output range of the PID controller is limited by the values of P3-07 & P3-08.			
	1	**Upper limit set by analog input 1**	The output range of the PID controller is limited by the values of P3-08 & the signal applied to Analog Input 1.			
	2	**Lower limit set by analog input 1**	The output range of the PID controller is limited by the signal applied to Analog Input 1 & the value of P3-07.			
	3	**PID output added to analog input 1**	The output value from the PID Controller is added to the speed reference applied to the Analog Input 1.			
P3-10	**PID Feedback Select**		**0**	**5**	**0**	**-**
	0	**Analog Input 2**				
	1	**Analog Input 1**				
	2	**Motor Current**				
	3	**DC Bus Voltage**				
	4	**Differential : Analog Input 1 – Analog Input 2**				
	5	**Largest Value : Analog Input 1 or Analog Input 2**				
P3-11	**PID Error To Enable Ramp**		**0.0**	**25.0**	**0.0**	**%**
	Defines a threshold PID error level, whereby if the difference between the setpoint and feedback values is less than the set threshold, the internal ramp times of the drive are disabled. Where a greater PID error exists, the ramp times are enabled to limit the rate of change of motor speed on large PID errors, and react quickly to small errors. Setting to 0.0 means that the drive ramps are always enabled. This parameter is intended to allow the user to disable the drive internal ramps where a fast reaction to the PID control is required, however by only disabling the ramps when a small PID error exists, the risk of possible over current or over voltage trips being generated are reduced.					

Par	Parameter Name			Minimum	Maximum	Default	Units
P3-12	**PID Feedback Display Scaling**			**0.000**	**50.000**	**0.000**	**-**
	Applies a scaling factor to the displayed PID feedback, allowing the user to display the actual signal level from a transducer, e.g. 0 – 10 Bar etc.						
P3-13	**PID Error Wake Level**			**0.0**	**100.0**	**5.0**	**%**
	Sets a programmable level whereby if the drive enters standby motor whilst operating under PID control, the selected feedback signal must fall below this threshold before the drive will return to normal operation.						
P3-18	**PID Reset Control**			**0**	**1**	**1**	**-**
	0	**Continuous operation**	In this operating mode, the PID controller operates continuously, regardless of whether the drive is enabled or disabled. This can result in the output of the PID controller reaching the maximum level prior to the drive enable signal being applied.				
	1	**Operate only when the drive is enabled**	In this operating mode, the PID controller only operates when the drive is enabled, and hence will always start from zero when the drive is enabled.				

8.3. Parameter Group 4 – High Performance Motor Control

8.3.1. Overview

Parameters relating to the motor control are located together in Group 4. These parameters allow the user to:

- Select the motor type to match the connected motor.
- Carry out an autotune.
- Define the torque limits and setpoint source for control methods that support this (vector control methods only).

Optidrive P2 can operate with both Asynchronous Induction Motors, the type most commonly seen today, and also some synchronous motors. The sections below provide basic guidance on how to adjust the parameters to operate with the required motor type.

8.3.2. *Asynchronous IM Motors*

IM Motor Control Methods

IM Motors may be operated in the following modes:

- V/F Speed Control (Default Mode)
  - This mode provides the simplest control, and is suitable for a wide range of applications.
- Sensorless Vector Torque Control
  - This method is suitable for specific applications only, which require the motor torque to be the primary control function, rather than speed, and should be used with extreme care only in specific applications.
- Sensorless Vector Speed Control
  - This method provides increased starting torque compared to V/F mode, along with improved motor speed regulation with changing load conditions. This method is suitable for more demanding applications.

Operating in Sensorless Vector Speed Control Mode

Optidrive P2 can be programmed by the user to operate in Sensorless Vector mode, which provides enhanced low speed torque, optimum motor speed regulation regardless of load and accurate control of the motor torque. In most applications, the default Voltage Vector control mode will provide adequate performance, however if Sensorless Vector operation is required, use the following procedure.

- Ensure advanced parameter access is enabled by setting P1-14 = 101.
- Enter the motor nameplate details into the relevant parameters as follows:
  - P1-07 Motor Rated Voltage
  - P1-08 Motor Rated Current
  - P1-09 Motor Rated Frequency
  - (Optional) P1-10 Motor Rated Speed (Rpm)
  - P4-05 Motor Power Factor.
- Select Sensorless Vector Speed Control mode by setting P4-01 = 0.
- Ensure that the motor is correctly connected to the drive.
- Carry out a motor data Autotune by setting P4-02 = 1.

⚠	The Autotune will begin immediately when P4-02 is set regardless of the status of the drive enable signal. Whilst the autotune procedure does not drive or spin the motor, the motor shaft may still turn slightly. It is not normally necessary to uncouple the load from the motor; however the user should ensure that no risk arises from the possible movement of the motor shaft.
	It is essential that the correct motor data is entered into the relevant drive parameters. Incorrect parameter settings can result in poor or even dangerous performance.

8.3.3. Synchronous Motors

Overview

Optidrive P2 provides open loop vector control of the following synchronous motor types.

Permanent Magnet AC (PM AC) Motors and Brushless DC (BLDC) Motors

Optidrive P2 can be used to control Permanent Magnet AC or Brushless DC motors without a feedback encoder or resolver. These motors operate synchronously, and a vector control strategy is used to maintain correct operation. In general, the motor can be operated between 10% - 100% of rated speed with a correctly selected and configured drive. Optimum control is achieved when the motor back EMF / Rated speed ratio is >= 1V/Hz. Motors with Back EMF / Rated frequency ratio below this level may not operate correctly, or may operate only with reduced speed range.

PM AC and BLDC motor control employs the same strategy, and the same commissioning method is applied.

⚠	Permanent Magnet motors (including BLDC) produce an output voltage known as the Back EMF when the shaft is rotated. The user must ensure that the motor shaft cannot rotate at a speed where this Back EMF exceeds the voltage limit for the drive, otherwise damage can occur.

The following parameter settings are necessary before attempting to operate the motor.

- Ensure advanced parameter access is enabled by setting P1-14 = 101 (default value for security access).
- Enter the motor nameplate details into the relevant parameters as follows:
  - o P1-07 Back EMF at Rated Frequency / Speed (kE)

    This is the voltage imposed by the magnets at the drive output terminals when the motor operates at rated frequency or speed. Some motors may provide a value for volts per thousand RPM, and it may be necessary to calculate the correct value for P1-07.
  - o P1-08 Motor Rated Current.
  - o P1-09 Motor Rated Frequency.
  - o (Optional) P1-10 Motor Rated Speed (Rpm).
- Select PM Motor Speed control mode by setting P4-01 = 3 or BLDC Motor Speed Control by setting P4-01 = 5.
- Ensure that the motor is correctly connected to the drive.
- Carry out a motor data Autotune by setting P4-02 = 1.
  - o The autotune measures the electrical data required from the motor to ensure good control.
- To improve motor starting and low speed operation, the following parameters may require adjustment:
  - o P7-14: Low Frequency Torque Boost Current: Injects additional current into the motor to help rotor alignment at low output frequency. Set as % of P1-08.
  - o P7-15: Low Frequency Torque Boost Frequency Limit: Defines the frequency range where the torque boost is applied. Set as % of P1-09.

Following the steps above, it should be possible to operate the motor. Further parameter settings are possible to enhance the performance if required, please refer to your Invertek Drives Sales Partner for more information.

8.3.4. Synchronous Reluctance (Syn RM) Motors

When operating with Synchronous Reluctance motors, carry out the following steps:

- Ensure advanced parameter access is enabled by setting P1-14 = 101 (default value for security access).
- Enter the motor nameplate details into the relevant parameters as follows:
  - o P1-07 Motor Rated Voltage.
  - o P1-08 Motor Rated Current.
  - o P1-09 Motor Rated Frequency.
  - o (Optional) P1-10 Motor Rated Speed (Rpm).
  - o P4-05 Motor Power Factor.
- Select Synchronous Reluctance Motor Control mode by setting P4-01 = 6.
- Ensure that the motor is correctly connected to the drive.
- Carry out a motor data Autotune by setting P4-02 = 1.

8.3.5. Group 4 Parameter Listing

⚠	Incorrect adjustment of parameters in menu group 4 can cause unexpected behaviour of the motor and any connected machinery. It is recommended that these parameters are only adjusted by experienced users.

Par	Parameter Name	Minimum	Maximum	Default	Units
P4-01	**Motor Control Mode**	**0**	**6**	**2**	**-**

Setting	Motor Type	Primary Control	Control Method	Additional Information
0	IM	Speed	Vector	Speed control with Torque Limit. Torque Limit Source selected by P4-06.
1	IM	Torque	Vector	Torque Control with Speed Limit. Torque reference selected by P4-06. Speed Limit defined by the Speed Reference.
2	IM	Speed	V/F	V/F control for simple applications with standard IM Motors.
3	AC PM	Speed	Vector	For speed control of AC PM motors with Sinusoidal back EMF.
4	AC PM	Torque	Vector	For torque control of AC PM motors with Sinusoidal back EMF.
5	BLDC	Speed	Vector	For speed control of BLDC motors with Trapezoidal back EMF.
6	Syn RM	Speed	Vector	For speed control of Synchronous Reluctance motors.

P4-02	**Motor Auto-tune Enable**	**0**	**1**	**0**	**-**

When set to 1, the drive immediately carries out a non-rotating autotune to measure the motor parameters for optimum control and efficiency. Following completion of the autotune, the parameter automatically returns to 0.

P4-03	**Vector Speed Controller Proportional Gain**	**0.1**	**400.0**	**50.0**	**%**

Sets the proportional gain value for the speed controller when operating in Vector Speed or Vector Torque motor control modes (P4-01 = 0 or 1). Higher values provide better output frequency regulation and response. Too high a value can cause instability or even over current trips. For applications requiring best possible performance, the value should be adjusted to suit the connected load by gradually increasing the value and monitoring the actual output speed of the load until the required dynamic behaviour is achieved with little or no overshoot where the output speed exceeds the setpoint.

In general, higher friction loads can tolerate higher values of proportional gain, and high inertia, low friction loads may require the gain to be reduced.

P4-04	**Vector Speed Controller Integral Time Constant**	**0.010**	**2.000**	**0.050**	**s**

Sets the integral time for the speed controller. Smaller values provide a faster response in reaction to motor load changes, at the risk of introducing instability. For best dynamic performance, the value should be adjusted to suit the connected load.

P4-05	**Motor Power Factor cos Ø**	**0.50**	**0.99**	**-**	**-**

When operating in Vector Speed motor control modes, this parameter must be set to the motor nameplate power factor.

P4-06	**Torque Control Reference / Limit Source**	**0**	**5**	**0**	**-**

0	**Maximum torque limit P4-07**	The torque controller reference / limit is set in P4-07.
1	**Analog Input 1**	The output torque is controlled based on the signal applied to Analog Input 1, whereby 100% input signal level will result in the drive output torque being limited by the value set in P4-07.
2	**Analog Input 2**	The output torque is controlled based on the signal applied to Analog Input 2, whereby 100% input signal level will result in the drive output torque being limited by the value set in P4-07.
3	**Fieldbus**	The output torque is controlled based on the signal from the communications Fieldbus, whereby 100% input signal level will result in the drive output torque being limited by the value set in P4-07.
4	**Master / Slave**	The output torque is controlled based on the signal from the Invertek Master / Slave, whereby 100% input signal level will result in the drive output torque being limited by the value set in P4-07.
5	**PID output**	The output torque is controlled based on the output of the PID controller, whereby 100% input signal level will result in the drive output torque being limited by the value set in P4-07.

P4-07	**Maximum Torque / Current Limit**	**P4-08**	**500**	**150**	**%**

When operating in Vector Speed or Vector Torque motor control modes (P4-01 = 0 or 1), this parameter defines the maximum torque limit or reference used by the drive in conjunction with P4-06.

When operating in V/F Mode (P4-01 = 2), this parameter defines the maximum output current the drive will provide to the motor before reducing the output frequency to attempt to limit the current.

Par	Parameter Name	Minimum	Maximum	Default	Units
P4-08	**Minimum Torque Limit**	**P4-08**	**150**	**0**	**%**
	Active only in Vector Speed or Vector Torque motor control modes (P4-01 = 0 or 1). Sets a minimum torque limit, whereby when the Optidrive is enabled, it will always attempt to maintain this torque on the motor at all times whilst operating.				
	⚠ **NOTE This parameter should be used with extreme care, as the drive output frequency will increase to achieve the torque level, and may exceed the selected speed reference.**				
P4-09	**Regenerative Torque Limit**	**0.0**	**500**	**100**	**%**
	Active only in Vector Speed or Vector Torque motor control modes (P4-01 = 0 or 1). Sets the maximum regenerating torque allowed by the Optidrive.				
P4-10	**V/F Characteristic Adjustment Frequency**	**0.0**	**P1-09**	**0.0**	**Hz**
	When operating in V/F mode (P4-01 = 2), this parameter in conjunction with P4-11 sets a frequency point at which the voltage set in P4-11 is applied to the motor. Care must be taken to avoid overheating and damaging the motor when using this feature.				
P4-11	**V/F Characteristic Adjustment Voltage**	**0**	**P1-07**	**0**	**V**
	Used in conjunction with parameter P4-10.				
P4-12	**Thermal Overload Retention**	**0**	**1**	**1**	**-**
	0 **Disabled**				
	1 **Enabled** All Optidrives feature electronic thermal overload protection for the connected motor, designed to protect the motor against damage. An internal overload accumulator monitors the motor output current over time, and will trip the drive if the usage exceeds the thermal limit. When P4-12 is disabled, removing the power supply from the drive and re-applying will reset the value of the accumulator. When P4-12 is enabled, the value is retained during power off.				
P4-13	**Output Phase Sequence**	**0**	**1**	**0**	**-**
	0 **U,V,W** Stand motor phase sequence. Typically, this provides clockwise rotation of the motor.				
	1 **U,W,V** Reverse motor phase sequence. Typically this provides counter-clockwise rotation of the motor.				
P4-14	**Thermal Overload Reaction**	**0**	**1**	**0**	**-**
	0 **Trip** When the overload accumulator reaches the limit, the drive will trip on It.trp to prevent damage to the motor.				
	1 **Current Limit Reduction** When the overload accumulator reaches 90% of, the output current limit is internally reduced to 100% of P1-08 in order to avoid an It.trp. The current limit will return to the setting in P4-07 when the overload accumulator reaches 10%.				
P4-15	**Master Mode Configuration (Master-Slave Mode)**	**0**	**1**	**0**	**-**
	0 **Motor speed & torque reference** In this mode, when the drive functions as a Master in Master-Slave Mode, the data broadcast on the drive network is the Master Actual Speed and the Master Torque Reference. This mode is suitable for Master-Slave applications which required speed following.				
	1 **Speed reference & motor torque** In this mode, when the drive functions as a Master in Master-Slave Mode, the data broadcast on the drive network is the Master Speed Reference and the Master Actual Torque. This mode is suitable for Master-Slave applications which required load sharing between multiple drives.				

8.4. Parameter Group 5 – Communication Parameters

8.4.1. Overview

Optidrive P2 provides many methods to allow the user to connect to a variety of fieldbus networks. In addition, connection to options such as external keypads, PC and Optistick are possible. Parameter Group 5 provides the parameters required to configure the various fieldbus interfaces and connection points.

8.4.2. Connecting Invertek Drives Options

All Invertek Drives options which require communication with the drive, such as the Optiport and Optipad remote keypads and Optistick connect to the Optidrive P2 using the built in RJ45 connection point. The pin connections on these options are already matched, such that a simple pin to pin plug in cable can be used to connect these options without any special requirements.

For further information on connecting and using these optional items, refer to the specific option User guide.

8.4.3. Connecting to a PC

Optidrive P2 may be connected to a PC with Microsoft Windows operating system to allow use of the Optitools Studio PC software for commissioning and monitoring. There are two possible methods of connection as follows:

- Wired Connection. Requires the optional PC connection kit OPT-2-USB485-OBUS which provides a USB to RS485 serial port conversion and premanufactured RJ45 connection.
- Bluetooth Wireless Connection. Requires the optional Optistick OPT-3-STICK. The PC must have Bluetooth onboard or a suitable Bluetooth dongle which can support a Bluetooth serial connection.

With either communication method, the steps to establish a connection between the PC and drive are as follows:

- Download and install the Optitools Studio PC software to the PC.
- Start the software, and select the Parameter Editor function.
- If the drive address has been changed in parameter P5-01, ensure that in the Optitools Studio software the Network Scan Limit setting in the lower left corner of the screen is set to the same or higher value.
- In Optitools Studio select Tools > Communication Type.
  - o If using the Optistick, Select BlueTooth.
  - o If using the wired PC connection kit, select RS485.
- In Optitools Studio select Tools > Select COM Port > Select the COM port associated with the connection.
- Click the Scan Drive Network button in the lower left corner of the screen.

8.4.4. Modbus RTU Connection

Optidrive P2 supports Modbus RTU communication. Connection is made through the RJ45 connector. For further information refer to section *9.2. Modbus RTU Communications on page 71*.

8.4.5. CAN Open Connection

Optidrive P2 supports CAN Open communication. Connection is made through the RJ45 connector. For further information refer to section *9.3. CAN Open Communication on page 73*.

8.4.6. Other Fieldbus Networks

Additional fieldbus network protocols are supported using optional interfaces. Refer to the Invertek Drives website for a list of supported protocols and the required interface option modules.

8.4.7. Communication Parameters

Par	Name		Minimum	Maximum	Default	Units
P5-01	**Drive Fieldbus Address**		**1**	**63**	**1**	**-**
	Sets the Fieldbus address for the Optidrive. When using Modbus RTU, this parameter sets the Node Address. Refer to section 9.2. *Modbus RTU Communications* for further information. Please note that if a higher Modbus address than 63 is required, P5-16 can be used – see P5-16 for further information. This parameter also determines the Optibus address of the drive for use with OptiTools Studio.					
P5-02	**CAN Baud Rate**		**125**	**1000**	**500**	**kbps**
	Sets the baud rate when CAN Open communications are used.					
P5-03	**Modbus RTU Baud rate**		**9.6**	**115.2**	**115.2**	**kbps**
	Sets the baud rate when Modbus RTU communications are used.					
P5-04	**Modbus RTU Data Format**		**-**	**-**	**n-1**	**-**
	Sets the expected Modbus telegram data format as follows:					
	n-1	No parity, 1 stop bit				
	n-2	No parity, 2 stop bits				
	O-1	Odd parity, 1 stop bit				
	E-1	Even parity, 1 stop bit				
P5-05	**Communications Loss Timeout**		**0.0**	**5.0**	**1.0**	**Seconds**
	Sets the watchdog time period for the communications channel. If a valid telegram is not received by the Optidrive within this time period, the drive will assume a loss of communications has occurred and react as selected below. Setting to zero disables the function.					
P5-06	**Communications Loss Action**		**0**	**3**	**0**	**-**
	0	**Trip & Coast To Stop**				
	1	**Ramp to Stop Then Trip**				
	2	**Ramp to Stop Only (No Trip)**				
	3	**Run at Preset Speed 8**				

Par	Name			Minimum	Maximum	Default	Units
P5-07	**Fieldbus Ramp Control**			**0**	**1**	**0**	**-**
	0	**Disabled**	Ramps are controlled from internal drive parameters P1-03 and P1-04.				
	1	**Enabled**	Ramps are controlled directly by the Fieldbus PDI4 Data Word.				
P5-08	**Fieldbus PDO-4 Data Select**			**0**	**7**	**0**	**-**
	0	**Motor torque**	0 to 2000 = 0 to 200.0%				
	1	**Motor power**	Output power in kW to two decimal places, e.g. 400 = 4.00kW				
	2	**Digital Input Status**	Bit 0 indicates digital input 1 status, bit 1 indicates digital input 2 status etc				
	3	**Analog Input 2**	0 to 1000 = 0 to 100.0%				
	4	**Heatsink Temperature**	0 to 100 = 0 to 100°C				
	5	**User register 1**	User Defined Register 1 Value				
	6	**User register 2**	User Defined Register 1 Value				
	7	**P0-80 value**	User Selected data value				
P5-12	**Fieldbus PDO-3 Data Select**			**0**	**7**	**0**	**-**
	0	**Motor current**	Output current to 1 decimal place, e.g. 100 = 10.0 Amps				
	1	**Motor power**	Output power in kW to two decimal places, e.g. 400 = 4.00kW				
	2	**Digital input status**	Bit 0 indicates digital input 1 status, bit 1 indicates digital input 2 status etc				
	3	**Analog Input 2**	0 to 1000 = 0 to 100.0%				
	4	**Heatsink Temperature**	0 to 100 = 0 to 100°C				
	5	**User register 1**	User Defined Register 1 Value				
	6	**User register 2**	User Defined Register 2 Value				
	7	**P0-80 value**	User Selected data value				
P5-13	**Fieldbus PDI-4 Function Select**			**0**	**1**	**0**	**-**
	0	**Fieldbus ramps**	This option must be selected if the drive acceleration and deceleration ramps are to be controlled from the fieldbus. P5-07 must also be set to 1 to enable this function.				
	1	**User register 4**	The value received by the drive in PDI 4 is transferred to User Register 4. This option allows the function of the process data word to be defined in Parameter Group 9. In this case, User Register 4 should not be written to within any PLC function code, although the value can be read.				
P5-14	**Fieldbus PDI-3 Function Select**			**0**	**2**	**0**	**-**
	0	**Torque reference / limit**	This option must be selected if the drive output torque limit / setpoint is to be controlled from the fieldbus. This also requires setting P4-06 = 3.				
	1	**PID reference**	This option allows the setpoint to the PID controller to be received from the Fieldbus. In order for this option to be used, P9-38 must be set to 1, and the PID User setpoint must not be utilised within the PLC function.				
	2	**User register 3**	The value received by the drive in PDI 3 is transferred to User Register 3. This option allows the function of the process data word to be defined in Parameter Group 9. In this case, User Register 3 should not be written to within any PLC function code, although the value can be read.				
P5-15	**Modbus Response Delay**			**0**	**16**	**0**	**Chr**
	Allows the user to configure an additional delay between the drive receiving a request via the Modbus RTU interface, and transmitting a reply. The value entered represents the delay in addition to the minimum delay permissible according to the Modbus RTU specification, and is expressed as the number of additional characters.						
P5-16	**Drive Modbus Address**			**0**	**273**	**0**	**-**
	The drive Modbus (and Optibus) address is set in P5-01 which has a maximum value of 63. If a higher Modbus address is required for a larger network, it can be set in this parameter. If this parameter is set to a value greater than 0, this address will become the Drive Modbus address. If this value is set to 0, P5-01 determines the Drive Modbus address.						

8.5. Advanced Parameters

For Advanced Parameters, basic information only is provided in this guide. The parameter functions are described more fully in Optitools Studio PC software.

8.5.1. Parameter Group 6 – Advanced Configuration

Par.	Function	Setting Range		Default	Notes
P6-01	Firmware Upgrade Enable	0	Disabled	0	This parameter should not be adjusted by the user.
		1	Update I/O & P/S		
		2	Update I/O		
		3	Update P/S		
P6-02	Thermal Overload Management	4 – 32kHz (Model Dependent)		4 kHz	Minimum Effective Switching Frequency.
P6-03	Auto Reset Time Delay	1 – 60 Seconds		20s	
P6-04	Relay Output Hysteresis	0.0 – 25.0%		0.3%	
P6-05	Encoder Feedback Enable	0	Disabled	0	
		1	Enabled		
P6-06	Encoder PPR	0 - 65535		0	
P6-07	Speed Error Trip Threshold	0.0 – 100.0%		5.0%	
P6-08	Max Speed Reference Frequency	0 – 20kHz		0 kHz	
P6-09	Speed Droop Control	0.0 – 25.0%		0.0%	
P6-10	Function Block Program Enable	0	Disabled	0	
		1	Enabled		
P6-11	Speed Hold Time on Enable	0 – 250s		0s	
P6-12	Speed Hold / DC Injection Time on Disable	0 – 250s		0s	
P6-13	Hoist Brake Release Time	0.0 – 5.0s		0.2s	
P6-14	Hoist Brake Apply Time	0.0 – 5.0s		0.3s	
P6-15	Hoist Brake Pre-Torque Level	0.0 – 200.0%		8.0%	
P6-16	Hoist Pre-Torque Time Limit	0.0 – 25.0s		5.0s	
P6-17	Maximum Torque Time Limit	0.0 – 25.0s		0.0s	
P6-18	DC Injection Braking Current	0.0 – 100.0%		0.0%	This function is active only for Induction Motors (IM) and Synchronous Reluctance Motor (SyncRM).
P6-19	Brake Resistor Resistance	Model Dependent			
P6-20	Brake Resistor Power	Model Dependent			
P6-21	Brake Chopper Ut Duty	0.0 – 20.0%		2.0%	
P6-22	Reset Fan Run Time	0	No Reset	0	
		1	Reset		
P6-23	Reset Energy Meters	0	No Reset	0	
		1	Reset		
P6-24	Maintenance Time Interval	0 – 60000 Hours		0 Hours	
P6-25	Reset Maintenance Indicator	0	No Reset	0	
		1	Reset		
P6-26	Analog Output 1 Scaling	0.0 – 500.0%		100.0%	
P6-27	Analog Output 1 Offset	-500.0 – 500.0%		0.0%	
P6-28	P0-80 Display Index	0 - 200		0	
P6-29	User Default Parameters	0	No Function	0	
		1	Save user parameters		
		2	Clear user parameters		
P6-30	Level 3 (Advanced) Access Code	0 – 9999		201	

8.5.2. Parameter Group 7 – Motor Control

Par.	Function	Setting Range		Default	Notes
P7-01	Motor Stator Resistance	0.000 – 65.535		Drive Dependent	Motor data, measured or calculated during the autotune. P7-04 is not used for PM & BLDC Motors. P7-06 is used only for PM motors.
P7-02	Motor Rotor Resistance	0.000 – 65.535			
P7-03	Motor Stator Inductance (d)	0.0000 – 1.0000			
P7-04	Magnetising Current (id)	Drive Dependent			
P7-05	Motor Leakage Coefficient (Sigma)	0.000 – 0.250			
P7-06	Motor Q Axis Inuctance (Lsq)	0.0000 – 1.0000			
P7-07	Enhanced Generator Mode	0	Disable	0	Improves motor control in applications with high regenerative power requirement.
		1	Enable		
P7-08	Motor Parameter Adaptation	0	Disabled	0	Enables motor parameter adaptation, intended to compensate for changes in the motor temperature during operation.
		1	Enable		
P7-09	Over Voltage Current Limit	0.0 – 100.0%		5.0%	
P7-10	Load Inertia Constant	0 - 600		10	
P7-11	Pulse Width Minimum Limit	0 - 500		150	
P7-12	V/F Mode Magnetising Delay Time	0 – 5000ms		Drive Dependent	Sets the motor magnetising period in V/F Mode. Sets the motor alignment time in PM modes.
P7-13	Vector Speed Controller Differential Gain	0.0 - 400%		0.00	Derivative speed loop gain applied in Vector control modes.
P7-14	Low Frequency Torque Boost	0.0 – 100.0%		0.0%	For PM Motors, applies a torque boost current at low frequency, % x P1-08.
P7-15	Torque Boost Frequency Limit	0.0 – 50.0%		0.0%	For PM motors, determines the frequency, % x P1-09 when the boost current is removed.
P7-16	PM Motor Signal Injection	0	Disabled	0	
		1	Signal Injection During Magnetizing Period		
		2	Signal Injection at Low Speed		
		3	Signal Injection During Magnetizing Period and at Low Speed		
P7-17	Signal Injection Level	0 - 100		10	
P7-18	Over Modulation	0	Disabled	0	
		1	Enable		
P7-19	Modulation Mode	0	3-Phase Modulation	0	
		1	2-Phase Modulation		

8.5.3. Parameter Group 8 – Additional Ramps and Functions

Par.	Function	Setting Range		Default	Notes
P8-01	Acceleration Ramp 2	0.00 – 600.0 / 0.0 – 6000.0s		5.0s	
P8-02	Ramp 1 → 2 Speed Boundary	0.0 – P1-01 Hz / Rpm		0.0	
P8-03	Acceleration Ramp 3	0.00 – 600.0 / 0.0 – 6000.0s		5.0s	
P8-04	Ramp 2 → 3 Speed Boundary	0.0 – P1-01 Hz / Rpm		0.0	
P8-05	Acceleration Ramp 4	0.00 – 600.0 / 0.0 – 6000.0s		5.0s	
P8-06	Ramp 3 → 4 Speed Boundary	0.0 – P1-01 Hz / Rpm		0.0	
P8-07	Deceleration Ramp 4	0.00 – 600.0 / 0.0 – 6000.0s		5.0s	
P8-08	Ramp 4 → 3 Speed Boundary	0.0 – P1-01 Hz / Rpm		0.0	
P8-09	Deceleration Ramp 3	0.00 – 600.0 / 0.0 – 6000.0s		5.0s	
P8-10	Ramp 3 → 2 Speed Boundary	0.0 – P1-01 Hz / Rpm		0.0	
P8-11	Deceleration Ramp 2	0.00 – 600.0 / 0.0 – 6000.0s		5.0s	
P8-12	Ramp 2 → 1 Speed Boundary	0.0 – P1-01 Hz / Rpm		0.0	
P8-13	Ramp Select Control	0	Digital input selection	0	
		1	Speed based selection		

8.5.4. Parameter Group 9 – User Inputs and Output Programming

Par.	Function	Setting Range		Default	Notes
P9-01	Enable Input Source	These parameters allow the user to directly select the source of the various command points. Parameters are only adjustable if P1-13 = 0. This allows complete flexibility over the drive control functions, and interaction with the internal Function Block programming environment.			
P9-02	Fast Stop Input Source				
P9-03	Run Forward Input Source				
P9-04	Run Reverse Input Select				
P9-05	Latch Function Enable	0	OFF	0	
		1	ON		
P9-06	Reverse Input Source	See above			
P9-07	Reset Input Source				
P9-08	External Trip Input Source				
P9-09	Terminal Control Select Source				
P9-10	Speed Reference Source 1	In combination with P9-18 – P9-20, allow selection of several speed reference sources for common applications.			
P9-11	Speed Reference Source 2				
P9-12	Speed Reference Source 3				
P9-13	Speed Reference Source 4				
P9-14	Speed Reference Source 5				
P9-15	Speed Reference Source 6				
P9-16	Speed Reference Source 7				
P9-17	Speed Reference Source 8				
P9-18	Speed Reference Select Input 0	See above			
P9-19	Speed Reference Select Input 1				
P9-20	Speed Reference Select Input 2				
P9-21	Preset Speed Select Input 0				
P9-22	Preset Speed Select Input 1				
P9-23	Preset Speed Select Input 2				
P9-24	Acceleration Ramp Select Bit 0				
P9-25	Acceleration Ramp Select Bit 1				
P9-26	Deceleration Ramp Bit 0				
P9-27	Deceleration Ramp Bit 1				
P9-28	Motorised Pot Up Input Source				
P9-29	Motorised Pot Down Input Source				
P9-30	Speed Limit Switch Forward				
P9-31	Speed Limit Switch Reverse				
P9-33	Analog Output 1 Source	0	Defined by P2-11	0	These parameters allow the user to override the normal parameter control source for the associated function, allowing interaction with the internal Function Block programming environment.
		1	Function block program - digital		
		2	Function block program - analog		
P9-34	Analog Output 2 Source	0	Defined by P2-13	0	
		1	Function block program - digital		
		2	Function block program - analog		
P9-35	Relay 1 Control Source	0	Defined by P2-15	0	
		1	Function block program - digital		
P9-36	Relay 2 Control Source	0	Defined by P2-18	0	
		1	Function block program - digital		
P9-37	Display Scaling Source Control	0	Defined by P2-21	0	
		1	Function block program - digital		
P9-38	PID Reference Source	0	Defined by P3-05	0	
		1	Function block program - digital		
P9-39	PID Feedback Source	0	Defined by P3-10	0	
		1	Function block program - digital		
P9-40	Torque Reference Source	0	Defined by P4-06	0	
		1	Function block program - digital		
P9-41	Relay 3,4,5 Function	0	Healthy : Tripped : Running	0	
		1	Function block program - digital		

8.6. Parameter Group 0 – Monitoring Parameters (Read Only)

Par.	Function	Units
P0-01	Analog Input 1 Value	%
P0-02	Analog Input 2 Value	%
P0-03	Digital Input Status – Bit representation (0 or 1) where the left most digit indicates the status of Digital Input 1	N/A
P0-04	Speed Controller Reference	Hz / RPM
P0-05	Torque Controller Reference	%
P0-06	Digital Speed Reference	Hz / RPM
P0-07	Fieldbus Speed Reference	Hz / RPM
P0-08	PID Reference (Setpoint)	%
P0-09	PID Feedback	%
P0-10	PID Output	%
P0-11	Motor Voltage	V
P0-12	Output Torque	%
P0-13	Trip Log – Last 4 Trips	N/A
P0-14	Magnetising Current (id)	A
P0-15	Rotor Current (iq)	A
P0-16	DC Bus Voltage Ripple	V
P0-17	Motor Stator Resistance Rs	Ω
P0-18	Motor Stator Inductance Ls	H
P0-19	Motor Rotor Resistance Rr	Ω
P0-20	DC Bus Voltage	V
P0-21	Heatsink Temperature	°C
P0-22	Time Left To Next Service	Hours
P0-23	Time Heatsink > 85°C	HH:MM:SS
P0-24	Time Internal > 80°C	HH:MM:SS
P0-25	Estimated Rotor Speed	Hz / RPM
P0-26	kWh Meter	kWh
P0-27	MWh Meter	MWh
P0-28	Software Version	N/A
P0-29	Drive type	N/A
P0-30	Drive serial number	N/A
P0-31	Total Run Time	HH:MM:SS
P0-32	Run Time Since Last Trip 1	HH:MM:SS
P0-33	Run Time Since Last Trip	HH:MM:SS
P0-34	Run Time Since Last Enable	HH:MM:SS
P0-35	Cooling fan operating time	Hours
P0-36	DC Bus Voltage Log: 8 samples, 256ms	V
P0-37	DC Bus Voltage Ripple Log: 8 samples 20ms	V
P0-38	Heatsink Temperature Log: 8 samples, 30s	°C
P0-39	Internal Temperature Log: 8 samples, 30s	°C
P0-40	Motor Current Log: 8 samples 256ms	A
P0-41	O-I Fault Counter	N/A
P0-42	O-Volts Fault Counter	N/A
P0-43	U-Volts Fault Counter	N/A
P0-44	Heatsink O-Temp Counter	N/A
P0-45	Brake resistor over current trip counter	N/A

Par.	Function	Units
P0-46	Internal over temperature trip count	N/A
P0-47	I/O Comms Fault Counter	N/A
P0-48	DSP Comms Fault Counter	N/A
P0-49	Modbus RTU Fault Counter	N/A
P0-50	CAN Fault Counter	N/A
P0-51	PDI cyclic data	N/A
P0-52	PDO cyclic data	N/A
P0-53	Phase U Current Offset and Reference	N/A
P0-54	Phase V Current Offset and Reference	N/A
P0-55	Reserved	N/A
P0-56	Brake Max On Time / Duty	N/A
P0-57	Ud / Uq	N/A
P0-58	Encoder Feedback Speed	Hz / RPM
P0-59	Frequency Input Speed	Hz / RPM
P0-60	Calculated Slip Speed	Hz / RPM
P0-61	Relay Speed Hysteresis	Hz / RPM
P0-62	Droop speed	Hz / RPM
P0-63	Post ramp speed reference	Hz / RPM
P0-64	Actual Eff. Switching Frequency	kHz
P0-65	Drive Total Life Time	HH:MM:SS
P0-66	Function block program ID	N/A
P0-67	Overload Integration Level	%
P0-68	User ramp value	S
P0-69	I2C Error Counter	N/A
P0-70	Option Module ID	N/A
P0-71	Fieldbus Module ID	N/A
P0-72	Internal Temperature	°C
P0-73	24 Hour Timer Value	Minute
P0-74	L1 Input Voltage	V
P0-75	L2 Input Voltage	V
P0-76	L3 Input Voltage	V
P0-77	Encoder Pulse Count	N/A
P0-78	Test parameter	N/A
P0-79	Boot-Loader and Motor Control Version	N/A
P0-80	P6-28 Selected Parameter	N/A

9. Serial Communications

9.1. RS-485 Communications

Optidrive P2 has an RJ45 connector located within the wiring enclosure of the drive. This connector allows the user to set up a drive network via a wired connection. The connector contains two independent RS485 connections, one for Invertek's Optibus Protocol and one for Modbus RTU / CANBus. Both connections can be used simultaneously. The Optibus connection is always available, and can be used simultaneously with other interfaces, however only one other interface may be used, e.g. If Modbus RTU is in use, CAN is disabled. If a Fieldbus Option Module (e.g. Profibus) is inserted into the drive, both Modbus and CAN are disabled. The electrical signal arrangement of the RJ45 connector is shown as follows:

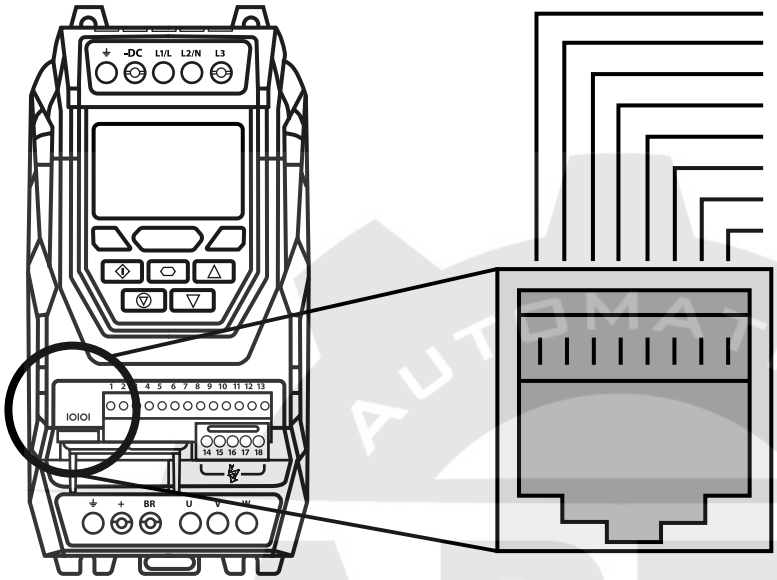

1	CAN-
2	CAN+
3	0 Volts
4	Optibus / Remote Keypad / PC Connection
5	Optibus / Remote Keypad / PC Connection +
6	+24 Volt
7	-RS485 (Modbus RTU)
8	+RS485 (Modbus RTU)

Warning:
This is not an Ethernet connection. Do not connect directly to an Ethernet port.

Warning:
When using Modbus RTU or CANopen, ensure that the 0V signal (T3) is also used to avoid comms errors and potentially damaging common mode voltages.

- The Optibus data link is only used for connection of Invertek peripherals and inter-drive communication.
- The Modbus interface allows connection to a Modbus RTU network as described in section 9.2. *Modbus RTU Communications.*

9.1.1. RS-485 Communications Electrical Connections

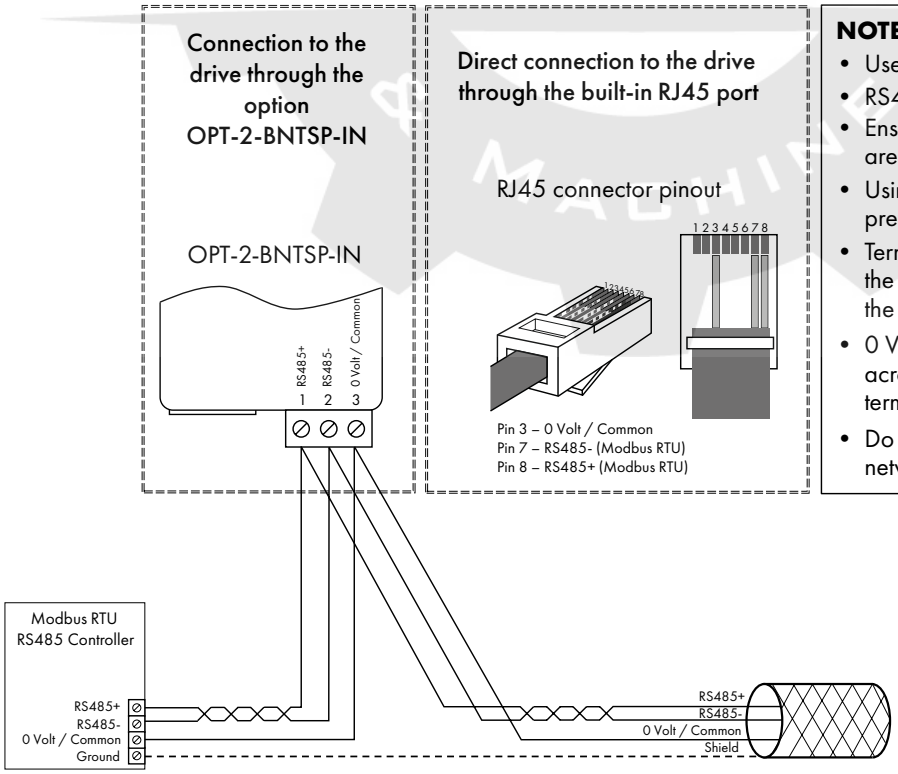

NOTES

- Use 3 or 4 Conductor Twisted Pair Cable
- RS485+ and RS485- must be twisted pair
- Ensure the network taps for the drive are kept as short as possible
- Using Option OPT-2-BNTSP-IN is preferred
- Terminate the network cable shield at the controller only. Do not terminate at the drive!
- 0 Volt common must be connected across all devices and to reference 0 Volt terminal at the controller
- Do not connect the 0V Common of the network to power ground

Modbus RTU and CANbus connection should be made via the RJ45 connector. The pin assignments are as shown above, in section *9.1. RS-485 Communications on page 70*.

- Modbus RTU and CANbus networks require three conductors for best operation and to eliminate common mode voltages on the drive terminals:
  - RS485+
  - RS485-
  - 0 Volt Common
- Connection should be made using a suitable dual twisted pair, shielded cable, with a wave impedance of 120 Ohms.
- Use one of the twisted pairs to connect to the RS485+ and RS485- of each drive.
- Use one conductor of the remaining pair to connect together all the 0 volt common connection terminals.
- The cable shield should be connected to a suitable clean ground point to prevent interference with the screen maintained as close as possible to the cable terminations.
- Do not connect the 0 Volt Common, RS485- or RS485+ to ground at any point.
- Network terminating resistor (120 Ohms) should be used at the end of the network to reduce noise.

9.2. Modbus RTU Communications

9.2.1. *Modbus Telegram Structure*

The Optidrive P2 supports Master / Slave Modbus RTU communications, using the 03 Read Multiple Holding Registers and 06 Write Single Holding Register commands and 16 Write Multiple Holding Registers (Supported for registers 1 – 4 only). Many Master devices treat the first Register address as Register 0; therefore it may be necessary to convert the Register Numbers detailed in section *9.2.2. Modbus Control & Monitoring Registers on page 71* by subtracting 1 to obtain the correct Register address.

9.2.2. *Modbus Control & Monitoring Registers*

The following is a list of accessible Modbus Registers available in the Optidrive P2.

- When Modbus RTU is configured as the Fieldbus option, all of the listed registers can be accessed.
- Registers 1 and 2 can be used to control the drive provided that Modbus RTU is selected as the primary command source (P1-12 = 4) and no Fieldbus Option Module is installed in the drive Option Slot.
- Register 4 can be used to control the acceleration and deceleration rate of the drive providing that Fieldbus Ramp Control is enabled (P5-07 = 1).
- Registers 6 to 24 can be read regardless of the setting of P1-12.

Register Number	Upper Byte	Lower Byte	Read Write	Notes
1	Command Control Word		R/W	Command control word used to control the Optidrive when operating with Modbus RTU. The Control Word bit functions are as follows: Bit 0 : Run/Stop command. Set to 1 to enable the drive. Set to 0 to stop the drive. Bit 1 : Fast stop request. Set to 1 to enable drive to stop with 2nd deceleration ramp. Bit 2 : Reset request. Set to 1 in order to reset any active faults or trips on the drive. This bit must be reset to zero once the fault has been cleared. Bit 3 : Coast stop request. Set to 1 to issue a coast stop command.
2	Command Speed Reference		R/W	Setpoint must be sent to the drive in Hz to one decimal place, e.g. 500 = 50.0Hz.
3	Command Torque Reference		R/W	Setpoint must be sent to the drive in % to one decimal place, e.g. 2000 = 200.0%.
4	Command Ramp times		R/W	This register specifies the drive acceleration and deceleration ramp times used when Fieldbus Ramp Control is selected (P5-08 = 1) irrespective of the setting of P1-12. The input data range is from 0 to 60000 (0.00s to 600.00s).
6	Error code	Drive status	R	This register contains 2 bytes. The Lower Byte contains an 8 bit drive status word as follows: Bit 0 : 0 = Drive Disabled (Stopped), 1 = Drive Enabled (Running). Bit 1 : 0 = Drive Healthy, 1 = Drive Tripped. Bit 2 : No Function. Bit 3 : 0 = Drive Ready (STO Input Closed), 1 = Drive Inhibit (STO Input Open). Bit 4 : Maintenance Time Not Reached, 1 = Maintenance Time Reached. Bit 5 : 0 = Not In Standby (Sleep), 1 = Standby (Sleep) mode active. Bit 6 : 0 = Drive Not Ready, 1 = Drive Ready (Mains Power applied, No Inhibit, No Trip, Enable Input Present). Bit 7 : No Function. The Upper Byte will contain the relevant fault number in the event of a drive trip. Refer to section *11.1. Fault Messages* for a list of fault codes and diagnostic information.
7	Output Frequency		R	Output frequency of the drive to one decimal place, e.g.123 = 12.3 Hz.
8	Output Current		R	Output current of the drive to one decimal place, e.g.105 = 10.5 Amps.
9	Output Torque		R	Motor output torque level to one decimal place, e.g. 474 = 47.4 %.
10	Output Power		R	Output power of the drive to two decimal places, e.g.1100 = 11.00 kW.
11	Digital Input Status		R	Represents the status of the drive inputs where Bit 0 = Digital Input 1 etc.
20	Analog 1 Level		R	Analog Input 1 Applied Signal level in % to one decimal place, e.g. 1000 = 100.0%.
21	Analog 2 Level		R	Analog Input 2 Applied Signal level in % to one decimal place, e.g. 1000 = 100.0%.
22	Pre Ramp Speed Reference		R	Internal drive frequency setpoint.
23	DC bus voltages		R	Measured DC Bus Voltage in Volts.
24	Drive temperature		R	Measured Heatsink Temperature in °C.

9.2.3. Modbus Parameter Access

All User Adjustable parameters (Groups 1 to 5) are accessible by Modbus, except those that would directly affect the Modbus communications, e.g.

- P5-01 Drive Fieldbus Address – see also P5-16 Drive Modbus Address.
- P5-03 Modbus RTU Baud Rate.
- P5-04 Modbus RTU Data Format.

All user adjustable parameter values can be read from the drive and written to, depending on the operating mode of the drive – some parameters cannot be changed whilst the drive is enabled for example.

When accessing a drive parameter via Modbus, the Register number for the parameter is the same as the parameter number,

e.g. Parameter P1-01 = Modbus Register 101.

Modbus RTU supports sixteen bit integer values, hence where a decimal point is used in the drive parameter, the register value will be multiplied by a factor of ten,

e.g. Read Value of P1-01 = 500, therefore this is 50.0Hz.

For further details on communicating with Optidrives using Modbus RTU, please refer to your local Invertek Sales Partner.

9.3. CAN Open Communication

9.3.1. Overview

The CANopen communication profile in the P2 drive is implemented according to the specification DS301 version 4.02 of CAN in automation (www.can-cia.de). Specific device profiles such as DS402 are not supported.

9.3.2. Basic Operation Setup

The CANopen communication function is enabled by default after power up however in order to use any control functions through CANopen, Parameter P1-12 must be set to 6.

The CAN communication baud rate can is selected by parameter P5-02. Available baud rates are 125kbps, 250kbps, 500kbps, 1Mbps. Default settings is 500kbps.

The Node ID is set up through drive address parameter P5-01 with a default value of 1.

9.3.3. COB ID and Functions

Optidrive P2 provides the following default COB-ID and functions:

Table 1 : Messages and COB-IDs

Type	COB-ID	Function
NMT	000h	Network management.
Sync	080h	Synchronous message. COB-ID can be configured to other value.
Emergency	080h + Node address	Emergency message. COB-ID can be configured to other value.
PDO1 (TX)	180h + Node address	Process data object. PDO1 is pre-mapped and enabled by default. PDO2 is pre-mapped and disabled by default. Transmission mode, COB-ID and mapping can be configured.
PDO1 (RX)	200h + Node address	
PDO2 (TX)	280h + Node address	
PDO2 (RX)	300h + Node address	
SDO (TX)	580h + Node address	SDO channel can be used for drive parameter access.
SDO (RX)	600h + Node address	
Error Control	700h + Node address	Guarding and Heartbeat function are supported. COB-ID can be configured to other value.

NOTE

1. The Optidrive P2 SDO channel only supports expedited transmission.
2. The Optidrive P2 can only support up to 2 Process Data Objects (PDO). All PDOs are pre-mapped, however PDO2 is disabled by default. Table 2 gives the default PDO mapping information.
3. Customer configuration (mapping) will **NOT** be saved during power down. This means that the CANopen configuration will restore to its default condition each time the drive is powered up.

9.3.4. Default PDO Mapping

Table 2: PDO Default Mapping					
Type	**Objects No.**	**Mapped Object**	**Length**	**Mapped Function**	**Transmission**
RX PDO 1	1	2000h	Unsigned 16	Control command register	254 Valid immediately
	2	2001h	Integer 16	Speed reference	
	3	2002h	Integer 16	Torque reference	
	4	2003h	Unsigned 16	User ramp reference	
TX PDO1	1	200Ah	Unsigned 16	Drive status register	254 Send after receiving RX PDO1
	2	200Bh	Integer 16	Motor speed Hz	
	3	200Dh	Unsigned 16	Motor current	
	4	200Eh	Integer 16	Motor torque	
SDO (RX) Error Control	1	0006h	Unsigned 16	Dummy	254
	2	0006h	Unsigned 16	Dummy	
	3	0006h	Unsigned 16	Dummy	
	4	0006h	Unsigned 16	Dummy	
TX PDO2	1	200Fh	Unsigned 16	Motor power	254
	2	2010h	Integer 16	Drive temperature	
	3	2011h	Unsigned 16	DC bus value	
	4	200Ch	Integer 16	Motor speed (Internal data format)	

* Drive control can only be achieved when P1-12=6

9.3.5. Supported PDO Transmission Types

Various transmission modes can be selected for each PDO.

For RX PDO, the following modes are supported:

Table 3: RX PDO Transmission Mode		
Transmission Type	**Mode**	**Description**
0 – 240	Synchronous	The received data will be transferred to the drive active control register when the next sync message is received.
254, 255	Asynchronous	The received data will be transferred to the drive active control register immediately without delay.

For TX PDO, the following modes are supported:

Table 4: TX PDO Transmission Mode		
Transmission Type	**Mode**	**Description**
0	Acyclic synchronous	TX PDO will only be sent out if the PDO data has changed and PDO will be transmitted on reception of SYNC object.
1 - 240	Cyclic synchronous	TX PDO will be transmitted synchronously and cyclically. The transmission type indicates the number of SYNC object that are necessary to trigger TX PDO.
254	Asynchronous	TX PDO will only be transferred once corresponding RX PDO has been received.
255	Asynchronous	TX PDO will be transferred at anytime following a PDO data value change.

9.3.6. CAN Open Specific Object Table

Index	Sub index	Function	Access	Type	PDO Map	Default value
1000h	0	Device type	RO	Unsigned 32	N	0
1001h	0	Error register	RO	Unsigned 8	N	0
1002h	0	Manufacturer status register	RO	Unsigned 16	N	0
1005h	0	COB-ID Sync	RW	Unsigned 32	N	00000080h
1008h	0	Manufacturer device name	RO	String	N	ODP2
1009h	0	Manufacturer hardware version	RO	String	N	x.xx
100Ah	0	Manufacturer software version	RO	String	N	x.xx
100Ch	0	Guard time [1ms]	RW	Unsigned 16	N	0
100Dh	0	Life time factor	RW	Unsigned 8	N	0
1014h	0	COB-ID EMCY	RW	Unsigned 32	N	00000080h+Node ID
1015h	0	Inhibit time emergency [100us]	RW	Unsigned 16	N	0
1017h	0	Producer heart beat time [1ms]	RW	Unsigned 16	N	0
1018h	0	Identity object No. of entries	RO	Unsigned 8	N	4
	1	Vendor ID	RO	Unsigned 32	N	0x0000031A
	2	Product code	RO	Unsigned 32	N	Drive depended
	3	Revision number	RO	Unsigned 32	N	x.xx
	4	Serial number	RO	Unsigned 32	N	e.g. 1234/56/789
1200h	0	SDO parameter No. of entries	RO	Unsigned 8	N	2
	1	COB-ID client -> server (RX)	RO	Unsigned 32	N	00000600h+Node ID
	2	COB-ID server -> client (TX)	RO	Unsigned 32	N	00000580h+Node ID
1400h	0	RX PDO1 comms param No. of entries	RO	Unsigned 8	N	2
	1	RX PDO1 COB-ID	RW	Unsigned 32	N	40000200h+Node ID
	2	RX PDO1 transmission type	RW	Unsigned 8	N	254
1401h	0	RX PDO2 comms param No. of entries	RO	Unsigned 8	N	2
	1	RX PDO2 COB-ID	RW	Unsigned 32	N	C0000300h+Node ID
	2	RX PDO2 transmission type	RW	Unsigned 8	N	0
1600h	0	RX PDO1 mapping / No. of entries	RW	Unsigned 8	N	4
	1	RX PDO1 1st mapped object	RW	Unsigned 32	N	20000010h
	2	RX PDO1 2nd mapped object	RW	Unsigned 32	N	20010010h
	3	RX PDO1 3rd mapped object	RW	Unsigned 32	N	20020010h
	4	RX PDO1 4th mapped object	RW	Unsigned 32	N	20030010h
1601h	0	RX PDO2 mapping / No. of entries	RW	Unsigned 8	N	4
	1	RX PDO2 1st mapped object	RW	Unsigned 32	N	00060010h
	2	RX PDO2 2nd mapped object	RW	Unsigned 32	N	00060010h
	3	RX PDO2 3rd mapped object	RW	Unsigned 32	N	00060010h
	4	RX PDO2 4th mapped object	RW	Unsigned 32	N	00060010h
1800h	0	TX PDO1 comms param No. of entries	RO	Unsigned 8	N	3
	1	TX PDO1 COB-ID	RW	Unsigned 32	N	40000180h+Node ID
	2	TX PDO1 transmission type	RW	Unsigned 8	N	254
	3	TX PDO1 Inhibit time [100us]	RW	Unsigned 16	N	0
1801h	0	TX PDO2 comms param No. of entries	RO	Unsigned 8	N	3
	1	TX PDO2 COB-ID	RW	Unsigned 32	N	C0000280h+Node ID
	2	TX PDO2 transmission type	RW	Unsigned 8	N	0
	3	TX PDO2 Inhibit time [100us]	RW	Unsigned 16	N	0

Index	Sub index	Function	Access	Type	PDO Map	Default value
1A00h	0	TX PDO1 mapping / No. of entries	RW	Unsigned 8	N	4
	1	TX PDO1 1st mapped object	RW	Unsigned 32	N	200A0010h
	2	TX PDO1 2nd mapped object	RW	Unsigned 32	N	200B0010h
	3	TX PDO1 3rd mapped object	RW	Unsigned 32	N	200D0010h
	4	TX PDO1 4th mapped object	RW	Unsigned 32	N	200E0010h
1A01h	0	TX PDO2 mapping / No. of entries	RW	Unsigned 8	N	4
	1	TX PDO2 1st mapped object	RW	Unsigned 32	N	200F0010h
	2	TX PDO2 2nd mapped object	RW	Unsigned 32	N	20100010h
	3	TX PDO2 3rd mapped object	RW	Unsigned 32	N	20110010h
	4	TX PDO2 4th mapped object	RW	Unsigned 32	N	200C0010h

9.3.7. Manufacturer Specific Object Table

The following table shows some of the manufacturer specific object dictionary for Optidrive P2. For a complete list, refer to the Optidrive P2 CAN Open Application Note.

Index	Sub index	Function	Access	Type	PDO Map	Remark
2000h	0	Control command register	RW	Unsigned 16	Y	See Note Below
2001h	0	Speed reference	RW	Integer 16	Y	500 = 50.0Hz
2002h	0	Torque reference	RW	Integer 16	Y	1000 = 100.0%
2003h	0	User ramp reference	RW	Unsigned 16	Y	500 = 5.00s
200Ah	0	Drive status register	RO	Unsigned 16	Y	See Note Below
200Bh	0	Motor speed Hz	RO	Unsigned 16	Y	500 = 50.0Hz
200Dh	0	Motor current	RO	Unsigned 16	Y	123 = 12.3A
200Eh	0	Motor torque	RO	Integer 16	Y	4096 = 100.0%
200Fh	0	Motor power	RO	Unsigned 16	Y	1234 = 12.34kW
2010h	0	Drive temperature	RO	Integer 16	Y	30 = 30°C
2011h	0	DC bus value	RO	Unsigned 16	Y	
2012h	0	Digital input status	RO	Unsigned 16	Y	
2013h	0	Analog input 1 (percentage)	RO	Unsigned 16	Y	
2014h	0	Analog input 2 (percentage)	RO	Unsigned 16	Y	
2015h	0	Analog output 1	RO	Unsigned 16	Y	
2016h	0	Analog output 2	RO	Unsigned 16	Y	
2017h	0	relay output 1	RO	Unsigned 16	Y	
2018h	0	relay output 2	RO	Unsigned 16	Y	
2019h	0	relay output 3 (extension card)	RO	Unsigned 16	Y	
201Ah	0	relay output 4 (extension card)	RO	Unsigned 16	Y	
201Bh	0	relay output 5 (extension card)	RO	Unsigned 16	Y	
203Ah	0	Kilowatt hours (Can be reset by user)	RO	Unsigned 16	Y	
203Bh	0	Megawatt hours (Can be reset by user)	RO	Unsigned 16	Y	
203Ch	0	KWh meter	RO	Unsigned 16	Y	
203Dh	0	MWh meter	RO	Unsigned 16	Y	
203Eh	0	Total run hours	RO	Unsigned 16	Y	
203Fh	0	Total run minute/second	RO	Unsigned 16	Y	
2040h	0	Current run hours (Since last enable)	RO	Unsigned 16	Y	
2041h	0	Current run minute/second	RO	Unsigned 16	Y	
2042h	0	Time to next service	RO	Unsigned 16	Y	
2043h	0	Room Temperature	RO	Unsigned 16	Y	
2044h	0	Speed controller reference	RO	Unsigned 16	Y	
2045h	0	Torque controller reference	RO	Unsigned 16	Y	
2046h	0	Digital pot speed reference	RO	Unsigned 16	Y	

Object 2000h : Control Command Register

Status / Bit	15	14	13	12	11	10	9	8	7	6	5	4	3	2	1	0
0													Normal Operation			Stop
1													Coast Stop	Reset	Fast Stop	Run

Object 200Ah : Drive Status Register

Status / Bit	15	14	13	12	11	10	9	8	7	6	5	4	3	2	1	0
0	Drive Trip Code								No Function						Drive Healthy	Drive Disabled
1											In Standby	Maintenance Time reached	Inhibit	No Function	Drive Tripped	Drive Enabled

AUTOMATION APEX & MACHINE

10. Technical Data

10.1. Environmental

Ambient Temperature	Storage and Transportation	All Units	-40 ... 60°C / -40 ... 140°F	
	Operating	IP20 Units	-10 ... 50°C / 14 ... 122°F	
		IP55 Units	- 10 ... 40°C / 14 ... 104°F	UL Approved
			40 ... 50°C / 104 ... 122°F	With derating (refer to section *10.5.1. Derating for Ambient Temperature on page 82*)
		IP66 Units	- 10 ... 40°C / 14 ... 104°F	UL Approved
			40 ... 50°C / 104 ... 122°F	With derating (refer to section *10.5.1. Derating for Ambient Temperature on page 82*
Altitude	Operating	All Units	=<1000m	With UL approval
			=<4000m	With derating (refer to section *10.5.2. Derating for Altitude on page 82*
Relative Humidity	Operating	All Units	< 95%	Non-condensing, frost and moisture free
Environmental Conditions	IP55 & IP66 Optidrive P2 products are designed to operate in 3S3/3C3 environments in accordance with IEC 60721-3-3. IP20 Optidrive Pr products are designed to operate in 3S2/3C2 environments in accordance with IEC 60721-3-3.			

10.2. Input/Output Power and Current Ratings

The following tables provide the output current rating information for the various Optidrive P2 models. Invertek Drives always recommend that selection of the correct Optidrive is based upon the motor full load current at the incoming supply voltage.

Please note that the maximum cable length stated in the following tables indicate the maximum permissible cable length for the drive hardware and does not take into consideration EMC compliance. Typical input currents assuming a minimum of 1% supply impedance for single phase input drives. The input current can be reduced by increasing the supply impedance by installing input chokes.

10.2.1. 200 – 240 Volt (+/- 10%),1 Phase Input, 3 Phase Output

Frame Size	Power Rating		Input Current	Fuse or MCB (Type B)		Maximum Cable Size		Rated Output Current	Maximum Motor Cable Length		Recommended Brake Resistance
	kW	HP	A	Non UL	UL	mm²	AWG/kcmil	A	m	ft	Ω
2	0.75	1	8.6	16	15	8	8	4.3	100	330	100
2	1.5	2	12.9	16	17.5	8	8	7	100	330	50
2	2.2	3	19.2	25	25	8	8	10.5	100	330	35
3	4	5	33.2	40	40	8	8	15.3	100	330	20
4	5.5	7.5	55	80	70	35	2	24	100	330	20
4	7.5	10	66	80	80	35	2	30	100	330	20

10.2.2. 200 – 240 Volt (+/- 10%), 3 Phase Input, 3 Phase Output

Frame Size	Power Rating		Input Current	Fuse or MCB (Type B)		Maximum Cable Size		Rated Output Current	Maximum Motor Cable Length		Recommended Brake Resistance
	kW	HP	A	Non UL	UL	mm²	AWG/kcmil	A	m	ft	Ω
2	0.75	1	5.7	10	10	8	8	4.3	100	330	100
2	1.5	2	10.5	16	15	8	8	7	100	330	50
2	2.2	3	13.2	16	17.5	8	8	10.5	100	330	35
3	4	5	20.9	32	30	8	8	18	100	330	20
3	5.5	7.5	26.4	32	35	8	8	24	100	330	20
4	7.5	10	33.3	40	40	16	5	30	100	330	22
4	11	15	50.1	63	70	16	5	46	100	330	22
5	15	20	63.9	80	80	35	2	61	100	330	12
5	18.5	25	74.0	100	90	35	2	72	100	330	12
6	22	30	99.1	125	125	150	300MCM	90	100	330	6
6A	22	30	80.6	100	100	150	300MCM	90	100	330	6

Frame Size	Power Rating		Input Current	Fuse or MCB (Type B)		Maximum Cable Size		Rated Output Current	Maximum Motor Cable Length		Recommended Brake Resistance
	kW	HP	A	Non UL	UL	mm²	AWG/kcmil	A	m	ft	Ω
6	30	40	121.0	160	150	150	300MCM	110	100	330	6
6B	30	40	97.8	125	125	150	300MCM	110	100	330	6
6	37	50	159.7	200	200	150	300MCM	150	100	330	6
6B	37	50	139.7	200	175	150	300MCM	150	100	330	6
6	45	50	187.5	250	225	150	300MCM	180	100	330	6
6B	45	60	163.4	200	200	150	300MCM	180	100	330	6
6B	55	75	185.9	250	225	150	300MCM	202	100	330	6
7	55	50	206.5	250	250	150	300MCM	202	100	330	6
7	75	50	246.3	315	300	150	300MCM	248	100	330	6

10.2.3. 380 – 480 Volt (+ / - 10%), 3 Phase Input, 3 Phase Output

Frame Size	Power Rating		Input Current	Fuse or MCB (Type B)		Maximum Cable Size		Rated Output Current	Maximum Motor Cable Length		Recommended Brake Resistance
	kW	HP	A	Non UL	UL	mm²	AWG/kcmil	A	m	ft	Ω
2	0.75	1	3.5	6	6	8	8	2.2	100	330	400
2	1.5	2	5.6	10	10	8	8	4.1	100	330	200
2	2.2	3	7.5	10	10	8	8	5.8	100	330	150
2	4	5	11.5	16	15	8	8	9.5	100	330	100
3	5.5	7.5	17.2	25	25	8	8	14	100	330	75
3	7.5	10	21.8	32	30	8	8	18	100	330	50
3	11	15	27.5	40	35	8	8	24	100	330	40
4	15	20	34.2	50	45	16	5	30	100	330	22
4	18.5	25	44.1	63	60	16	5	39	100	330	22
4	22	30	51.9	63	70	16	5	46	100	330	22
5	30	40	66.1	80	80	35	2	61	100	330	12
5	37	50	77.3	100	100	35	2	72	100	330	12
6	45	60	102.7	125	125	150	300MCM	90	100	330	6
6A	45	60	83.5	125	110	150	300MCM	90	100	330	6
6	55	75	126.4	125	175	150	300MCM	110	100	330	6
6A	55	75	102.2	125	125	150	300MCM	110	100	330	6
6	75	100	164.7	200	200	150	300MCM	150	100	330	6
6B	75	100	144.1	200	175	150	300MCM	150	100	330	6
6	90	150	192.1	250	250	150	300MCM	180	100	330	6
6B	90	150	167.4	250	225	150	300MCM	180	100	330	6
6B	110	175	189.8	250	250	150	300MCM	202	100	330	6
7	110	175	210.8	250	300	150	300MCM	202	100	330	6
7	132	200	241.0	315	300	150	300MCM	240	100	330	6
7	160	250	299.0	400	400	150	300MCM	302	100	330	6
8	200	300	377.2	500	500	240	450MCM	370	100	330	3
8	250	400	458.7	600	600	240	450MCM	450	100	330	3

10.2.4. 480 – 525 Volt (+/- 10%), 3 phase Input, 3 Phase Output

Frame Size	Power Rating		Input Current	Fuse or MCB (Type B)		Maximum Cable Size		Rated Output Current	Maximum Motor Cable Length		Recommended Brake Resistance
	kW	HP	A	Non UL	UL	mm²	AWG/kcmil	A	m	ft	Ω
7	132		192	250		150	300MCM	185	100	330	7
7	160		215	315		150	300MCM	205	100	330	7
7	185		262	315		150	300MCM	255	100	330	7
7	200		275	400		150	300MCM	275	100	330	7

10.2.5. 500 – 600 Volt (+ / - 10%), 3 Phase Input, 3 Phase Output

Frame Size	Power Rating		Input Current	Fuse or MCB (Type B)		Maximum Cable Size		Rated Output Current	Maximum Motor Cable Length		Recommended Brake Resistance
	kW	HP	A	Non UL	UL	mm²	AWG/kcmil	A	m	ft	Ω
2	0.75	1	2.5	10	6	8	8	2.1	100	330	600
2	1.5	2	3.7	10	6	8	8	3.1	100	330	300
2	2.2	3	4.9	10	10	8	8	4.1	100	330	200
2	4	5	7.8	10	10	8	8	6.5	100	330	150
2	5.5	7.5	10.8	16	15	8	8	9	100	330	100
3	7.5	10	14.4	16	20	8	8	12	100	330	80
3	11	15	20.6	25	30	8	8	17	100	330	50
3	15	20	26.7	32	35	8	8	22	100	330	33
4	18.5	25	34	40	45	16	5	28	100	330	33
4	22	30	41.2	50	60	16	5	34	100	330	22
4	30	40	49.5	63	70	16	5	43	100	330	22
5	37	50	62.2	80	80	35	2	54	100	330	16
5	45	60	75.8	100	100	35	2	65	100	330	12
6	55	75	90.9	125	125	150	300MCM	78	100	330	12
6	75	100	108.2	125	150	150	300MCM	105	100	330	8
6	90	125	127.7	160	175	150	300MCM	130	100	330	8
6	110	150	160	200	200	150	300MCM	150	100	330	8

NOTE

- Ratings shown above apply to 40°C Ambient temperature. For derating information, refer to section *10.5.1. Derating for Ambient Temperature.*
- The drive is protected against short-circuit from power output to protective earth for all rated cable lengths, cable sizes and cable types.
- 3 phase drive can be connected to single phase supply when the output current is 50% derated.
- The maximum cable lengths stated here are based on hardware limitations and do NOT take into consideration any requirements for compliance to any EMC standards. Please see section *4.13. EMC Compliant Installation* for further information.
- The maximum motor cable length stated applies to using a shielded motor cable. When using an unshielded cable, the maximum cable length limit may be increased by 50%. When using the Invertek Drives recommended output choke, the maximum cable length may be increased by 100%.
- The PWM output switching from any inverter when used with a long motor cable length can cause an increase in the voltage at the motor terminals, depending on the motor cable length and inductance. The rise time and peak voltage can affect the service life of the motor. Invertek Drives recommend using an output choke for motor cable lengths of 50m or more to ensure good motor service life.
- For IP20 Frame Size 8 the Vector Speed and Torque control modes may not operate correctly with long motor cables and output filters. It is recommended to operate in V/F mode only for cable lengths exceeding 50m.
- Supply and motor cable sizes should be dimensioned according to local codes or regulations in the country or area of installation.
- For UL compliant installation, use Copper wire with a minimum insulation temperature rating of 70°C, UL Class CC or Class J Fuses (exception: Eaton Bussmann FWP series must be used for size 6A & 6B IP20 models).

10.3. Input Power Supply Requirements

Supply Voltage	200 – 240 RMS Volts for 230 Volt rated units, + /- 10% variation allowed.
	380 – 480 Volts for 400 Volt rated units, + / - 10% variation allowed.
	500 – 600 Volts for 600 Volt rated units, + / - 10% variation allowed.
Imbalance	Maximum 3% voltage variation between phase – phase voltages allowed.
	All Optidrive P2 units have phase imbalance monitoring. A phase imbalance of > 3% will result in the drive tripping. For input supplies which have supply imbalance greater than 3% (typically the Indian sub- continent & parts of Asia Pacific including China) Invertek Drives recommends the installation of input line reactors. Alternatively, the drives can be operated as a single phase supply drive with 50% derating.
Frequency	50 – 60Hz + / - 5% Variation.
Maximum Supply Short-Circuit Current Capacity	The maximum permissible short circuit current at the Optidrive Power terminals as defined in IEC60439-1 is:

230V single phase input drives	5kA
230V three phase input drives	100kA
400V three phase input drives	100kA
600V three phase input drives	100kA

10.4. Additional Information for UL Approved Installations

Optidrive P2 is designed to meet the UL requirements. In order to ensure full compliance, the following must be fully observed.

Input Power Supply Requirements	
Short Circuit Capacity	Please refer to *10.3. Input Power Supply Requirements* for maximum supply short-circuit capacity limits. Limits apply as shorct-circuit Amperes symmetrical with the specified maximum supply voltage when protected by UL type J, or CC fuses (exception: Eaton Bussmann FWP series must be used for size 6A & 6B IP20 models).
Incoming power supply connection must be according to section *4.3. Incoming Power Connection.*	
All Optidrive P2 units are intended for indoor installation within controlled environments which meet the condition limits shown in section *10.1. Environmental.*	
Branch circuit protection must be installed according to the relevant national codes. Fuse ratings and types are shown in section *10.2. Input/ Output Power and Current Ratings.*	
Suitable Power and motor cables should be selected according to the data shown in section *10.2. Input/Output Power and Current Ratings.*	
Power cable connections and tightening torques are shown in section *3.4. Installation Following a Period of Storage.*	
Optidrive P2 provides motor overload protection in accordance with the National Electrical Code (US). ▪ Where a motor thermistor is not fitted, or not utilised, Thermal Overload Memory Retention must be enabled by setting P4-12 = 1. ▪ Where a motor thermistor is fitted and connected to the drive, connection must be carried out according to the information shown in section *4.7. Motor Terminal Box Connections.*	
For Canadian Installations : transient surge suppression shall be installed on the line side of this equipment and shall be rated as shown below, suitable for over voltage category III and shall provide protection for a rated impulse withstand voltage peak of 2.5kV.	

Supply Voltage Rating of the Drive	Phase-Phase Surge Protection Voltage Rating	Phase-Ground Surge Protection Voltage Rating
200 - 240V AC + / - 10%	230V AC	230V AC
380 - 480V AC + / - 10%	480V AC	480V AC
500 - 600V AC + / - 10%	600V AC	600V AC

10.5. Derating Information

Derating of the drive maximum continuous output current capacity is require when:

- Operating at ambient temperature in excess of 40°C / 104°F for enclosed drives (Non UL Approved).
- Operating at Altitude in excess of 1000m/ 3281 ft.
- Operation with Effective Switching Frequency higher than 8kHz for IP20 models and 4kHz for IP55/IP66 models.

The following derating factors should be applied when operating drives outside of these conditions.

10.5.1. Derating for Ambient Temperature

Enclosure Type	Maximum Temperature Without Derating (UL Approved)	Derate by	Maximum Permissible Operating Ambient Temperature with Derating (Non UL Approved)
IP20	50°C / 122°F	N/A	50°C
IP55	40°C / 104°F	1.5% per °C (1.8°F)	50°C
IP66	40°C / 104°F	2.5% per °C (1.8°F)	50°C

10.5.2. Derating for Altitude

Enclosure Type	Maximum Altitude Without Derating	Derate by	Maximum Permissible (UL Approved)	Maximum Permissible (Non-UL Approved)
IP20	1000m / 3281ft	1% per 100m / 328 ft	2000m / 6562 ft	4000m / 13123 ft
IP55	1000m / 3281ft	1% per 100m / 328 ft	2000m / 6562 ft	4000m / 13123 ft
IP66	1000m / 3281ft	1% per 100m / 328 ft	2000m / 6562 ft	4000m / 13123 ft

10.5.3. Derating for Switching Frequency

Enclosure Type	Switching Frequency (Where available)					
	4kHz	8kHz	12kHz	16kHz	24kHz	32kHz
IP20	N/A	N/A	20%	30%	40%	50%
IP55	N/A	10%	10%	15%	25%	N/A
IP66	N/A	10%	25%	35%	50%	50%

10.5.4. Example of applying Derating Factors

A 4kW, IP66 drive is to be used at an altitude of 2000 metres above sea level, with 12kHz switching frequency and 45°C ambient temperature.

From the table above, we can see that the rated current of the drive is 9.5 Amps at 40°C,

Firstly, apply the switching frequency derating, 12kHz, 25% derating
9.5 Amps x 75% = 7.1 Amps

Now, apply the derating for higher ambient temperature, 2.5% per °C above 40°C = 5 x 2.5% = 12.5%
7.1 Amps x 87.5% = 6.2 Amps

Now apply the derating for altitude above 1000 metres, 1% per 100m above 1000m = 10 x 1% = 10%
7.9 Amps x 90% = 5.5 Amps continuous current available.

If the required motor current exceeds this level, it will be necessary to either:

- Reduce the switching frequency selected.
- Use a higher power rated drive and repeat the calculation to ensure sufficient output current is available.

10.6. Internal EMC Filter and Varistors – Disconnection Procedure

10.6.1. IP20 Drive Models

All Optidrive P2 models provide a simple method to disconnect the internal EMC filter and surge protection varistors by fully removing the screws shown below. This should only be carried out where necessary, for example in cases such as IT or ungrounded supplies, where the phase to ground voltage can exceed the phase to phase voltage.

The EMC filter disconnect screw is labelled "EMC".

The surge protection varistors disconnect screw is clearly labelled "VAR".

Frame Sizes 2 & 3

The EMC Filter and Varistor disconnect screws are located on the left side of the product when viewed from the front. Remove both screws completely

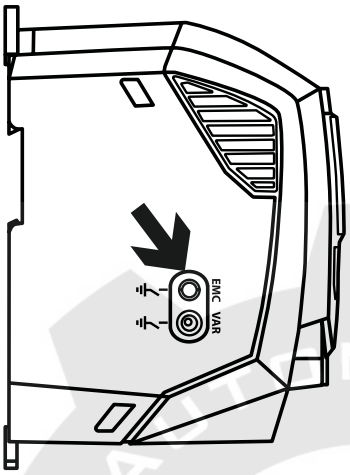

Frame Size 4

Frame Size 4 units have EMC Filter disconnection points only located on the front face of the unit as shown.

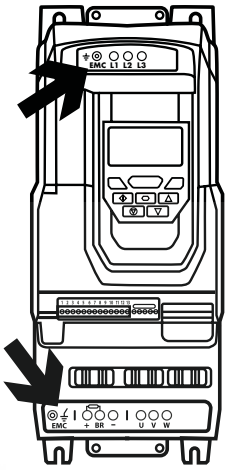

Frame Size 5

Frame Size 5 units have EMC Filter disconnection points only located on the front face of the unit as shown.

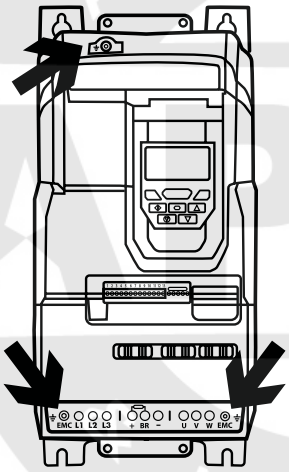

Frame Size 6A/6B

Frame Size 6A/6B units have EMC Filter disconnection points only located on the front face of the unit as shown.

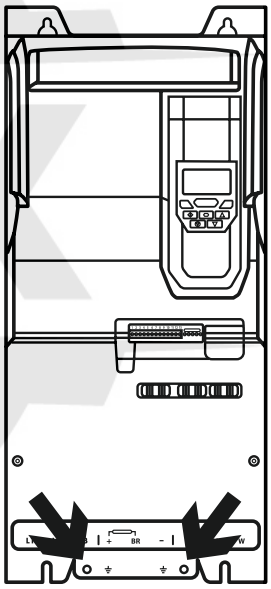

10.6.2. IP55 Models

These models require disassembly in order to disconnect the EMC filter. Disconnection should be carried out only by Invertek Drives Approved Service Partners.

10.6.2. IP66 Models

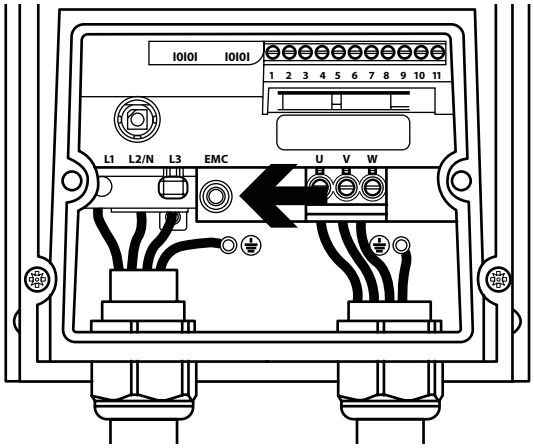

11. Troubleshooting

11.1. Fault Messages

Fault Code	No.	TFT Message Description	Corrective Action
no-FLt	00	No Fault	Displayed in P0-13 if no faults are recorded in the log.
OI-b	01	Brake channel over current	Ensure the connected brake resistor is above the minimum permissible level for the drive – refer to the ratings shown in section *10.2. Input/Output Power and Current Ratings.* Check the brake resistor and wiring for possible short circuits.
OL-br	02	Brake resistor overload	The drive software has determined that the brake resistor is overloaded, and trips to protect the resistor. Always ensure the brake resistor is being operated within its designed parameter before making any parameter or system changes. To reduce the load on the resistor, increase the deceleration time, reduce the load inertia or add further brake resistors in parallel, observing the minimum resistance value for the drive in use.
O-I	03	Over current trip	**Fault Occurs on Drive Enable** Check the motor and motor connection cable for phase – phase and phase – earth short circuits. Check the load mechanically for a jam, blockage or stalled condition. Ensure the motor nameplate parameters are correctly entered, P1-07, P1-08, P1-09. If operating in Vector mode (P4-01 – 0 or 1), also check the motor power factor in P4-05 and ensure an autotune has been successfully completed for the connected motor. Reduced the Boost voltage setting in P1-11. Increase the ramp up time in P1-03. If the connected motor has a holding brake, ensure the brake is correctly connected and controlled, and is releasing correctly. **Fault Occurs When Running** If operating in Vector mode (P4-01 – 0 or 1), reduce the speed loop gain in P4-03.
I.t-trP	04	Drive has tripped on overload after delivering >100% of value in P1-08 for a period of time.	Check to see when the decimal points are flashing (drive in overload) and either increase acceleration rate or reduce the load. Check motor cable length is within the limit specified for the relevant drive in section 10.2. Ensure the motor nameplate parameters are correctly entered in P1-07, P1-08, and P1-09. If operating in Vector mode (P4-01 – 0 or 1), also check the motor power factor in P4-05 and ensure an autotune has been successfully completed for the connected motor. Check the load mechanically to ensure it is free, and that no jams, blockages or other mechanical faults exist.
PS-trP	05	Hardware Over Current	Check the wiring to motor and the motor for phase to phase and phase to earth short circuits. Disconnect the motor and motor cable and retest. If the drive trips with no motor connected, it must be replaced and the system fully checked and retested before a replacement unit is installed.
O-volt	06	Over voltage on DC bus	The value of the DC Bus Voltage can be displayed in P0-20. A historical log is stored at 256ms intervals prior to a trip in parameter P0-36. This fault is generally caused by excessive regenerative energy being transferred from the load back to the drive. When a high inertia or over hauling type load is connected. If the fault occurs on stopping or during deceleration, increase the deceleration ramp time P1-04 or connect a suitable brake resistor to the drive. If operating in Vector Mode, reduce the speed loop gain P4-03. If operating in PID control, ensure that ramps are active by reducing P3-11.
U-volt	07	Under voltage on DC bus	This occurs routinely when power is switched off. If it occurs during running, check the incoming supply voltage, and all connections into the drive, fuses, contactors etc.
O-t	08	Heatsink over temperature	The heatsink temperature can be displayed in P0-21. A historical log is stored at 30 second intervals prior to a trip in parameter P0-38. Check the drive ambient temperature. Ensure the drive internal cooling fan is operating. Ensure that the required space around the drive as shown in *sections 3.5. Mechanical Dimensions and Weight* to *3.10. Guidelines for Mounting (IP66 Units)* has been observed, and that the cooling airflow path to and from the drive is not restricted. Reduce the effective switching frequency setting in parameter P2-24. Reduce the load on the motor / drive.
U-t	09	Under temperature	Trip occurs when ambient temperature is less than -10°C. The temperature must be raised over -10°C in order to start the drive.
P-dEF	10	Factory Default parameters have been loaded	Press STOP key, the drive is now ready to be configured for the required application.
E-trIP	11	External trip	E-trip requested on control input terminals. Some settings of P1-13 require a normally closed contact to provide an external means of tripping the drive in the event that an external device develops a fault. If a motor thermistor is connected check if the motor is too hot.

Fault Code	No.	TFT Message Description	Corrective Action
SC-Obs	12	Communications Fault	Communications lost with PC or remote keypad. Check the cables and connections to external devices.
FLt-dc	13	Excessive DC ripple	The DC Bus Ripple Voltage level can be displayed in parameter P0-16. A historical log is stored at 20ms intervals prior to a trip in parameter P0-37. Check all three supply phases are present and within the 3% supply voltage level imbalance tolerance. Reduce the motor load. If the fault persists, contact your local Invertek Drives Sales Partner.
P-LoSS	14	Input phase loss	Drive intended for use with a 3 phase supply, one input phase has been disconnected or lost.
h O-I	15	Instantaneous over current on drive output	Refer to fault 3 above.
th-FLt	16	Faulty thermistor on heatsink	Refer to your Invertek Sales Partner.
dAtA-F	17	Internal memory fault	Parameters not saved, defaults reloaded. Try again. If problem recurs, refer to your IDL Authorised Distributor.
4-20F	18	4-20mA Signal Lost	The reference signal on Analog Input 1 or 2 (Terminals 6 or 10) has dropped below the minimum threshold of 3mA. Check the signal source and wiring to the Optidrive terminals.
dAtA-E	19	Internal memory fault	Parameters not saved, defaults reloaded. Try again. If problem recurs, refer to your IDL Authorised Distributor.
U-dEF	20	User Parameter Default	User Parameter defaults have been loaded. Press the Stop key.
F-Ptc	21	Motor PTC Over Temperature	The connected motor PTC device has caused the drive to trip.
FAn-F	22	Cooling Fan Fault	Check and if necessary, replace the drive internal cooling fan.
O-hEAt	23	Ambient Temperature High	The measured temperature around the drive is above the operating limit of the drive. Ensure the drive internal cooling fan is operating. Ensure that the required space around the drive as shown in sections *3.5. Mechanical Dimensions and Weight* to *3.10. Guidelines for Mounting (IP66 Units)* has been observed, and that the cooling airflow path to and from the drive is not restricted. Increase the cooling airflow to the drive. Reduce the effective switching frequency setting in parameter P2-24. Reduce the load on the motor / drive.
O-tor9	24	Maximum Torque Limit Exceeded	The output torque limit has exceeded the drive capacity or trip threshold. Reduce the motor load, or increase the acceleration time.
U-tor9	25	Output Torque Too Low	Active only when hoist brake control is enabled P2-18 = 8. The torque developed prior to releasing the motor holding brake is below the preset threshold. Contact your local Invertek Sales Partner for further information on using the Optidrive P2 in hoist applications.
OUt-F	26	Drive output fault	Drive output fault.
Sto-F	29	Internal STO circuit Error	Refer to your Invertek Sales Partner.
Enc-01	30	Encoder Feedback Fault	Encoder communication /data loss.
SP-Err	31	Speed Error	Speed Error. The error between the measured encoder feedback speed or the estimated rotor speed is greater than the pre-set limit allowed. In Hoist Mode Operation, this protection is always active even if no encoder is fitted. The motor speed deviates from the intended motor speed by an error greater than that set in the limit parameter P6-07.
Enc-03	32	Encoder Feedback Fault	Incorrect Encoder PPR count set in parameter P6-06.
Enc-04	33	Encoder Feedback Fault	Encoder Channel A Fault.
Enc-05	34	Encoder Feedback Fault	Encoder Channel B Fault.
Enc-06	35	Encoder Feedback Fault	Encoder Channels A & B Fault.

Fault Code	No.	TFT Message Description	Corrective Action
AtF-01	40	Autotune Failed	Measured motor stator resistance varies between phases. Ensure the motor is correctly connected and free from faults. Check the windings for correct resistance and balance.
AtF-02	41		Measured motor stator resistance is too large. Ensure the motor is correctly connected and free from faults. Check that the power rating corresponds to the power rating of the connected drive.
AtF-03	42		Measured motor inductance is too low. Ensure the motor is correctly connected and free from faults.
AtF-04	43		Measured motor inductance is too large. Ensure the motor is correctly connected and free from faults. Check that the power rating corresponds to the power rating of the connected drive.
AtF-05	44		Measured motor parameters are not convergent. Ensure the motor is correctly connected and free from faults. Check that the power rating corresponds to the power rating of the connected drive.
Ph-SEq	45	Incorrect Supply Phase Sequence	Applies to Frame Size 8 drives only, indicates that the incoming power supply phase sequence is incorrect. Any 2 phases may be swapped.
OUt-Ph	49	Output Phase Loss	One of the motor output phases is not connected to the drive.
Sc-F01	50	Modbus Comms fault	A valid Modbus telegram has not been received within the watchdog time limit set in P5-05. Check the network master / PLC is still operating. Check the connection cables. Increase the value of P5-05 to a suitable level.
Sc-F02	51	CAN Open comms trip	A valid CAN open telegram has not been received within the watchdog time limit set in P5-05. Check the network master / PLC is still operating. Check the connection cables. Increase the value of P5-05 to a suitable level.
Sc-F03	52	Communications Option Module Fault	Internal communication to the inserted Communication Option Module has been lost. Check the module is correctly inserted.
Sc-F04	53	IO card comms trip	Internal communication to the inserted Option Module has been lost. Check the module is correctly inserted.

12. Energy Efficiency Classification

Please scan the QR code or visit **www.invertekdrives.com/ecodesign** to learn more about the Ecodesign Directive and for specific product efficiency classification and part load loss data in accordance with IEC 61800-9-2:2017.

AUTOMATION APEX & MACHINE

AUTOMATION
APEX
& MACHINE

82-P2MAN-IN_V3.08

Invertek Drives Ltd. Offa's Dyke Business Park, Welshpool, Powys SY21 8JF United Kingdom
Tel: +44 (0) 1938 556868 Fax: +44 (0) 1938 556869
www.invertekdrives.com