ISSUE DATE: 07/21/2014

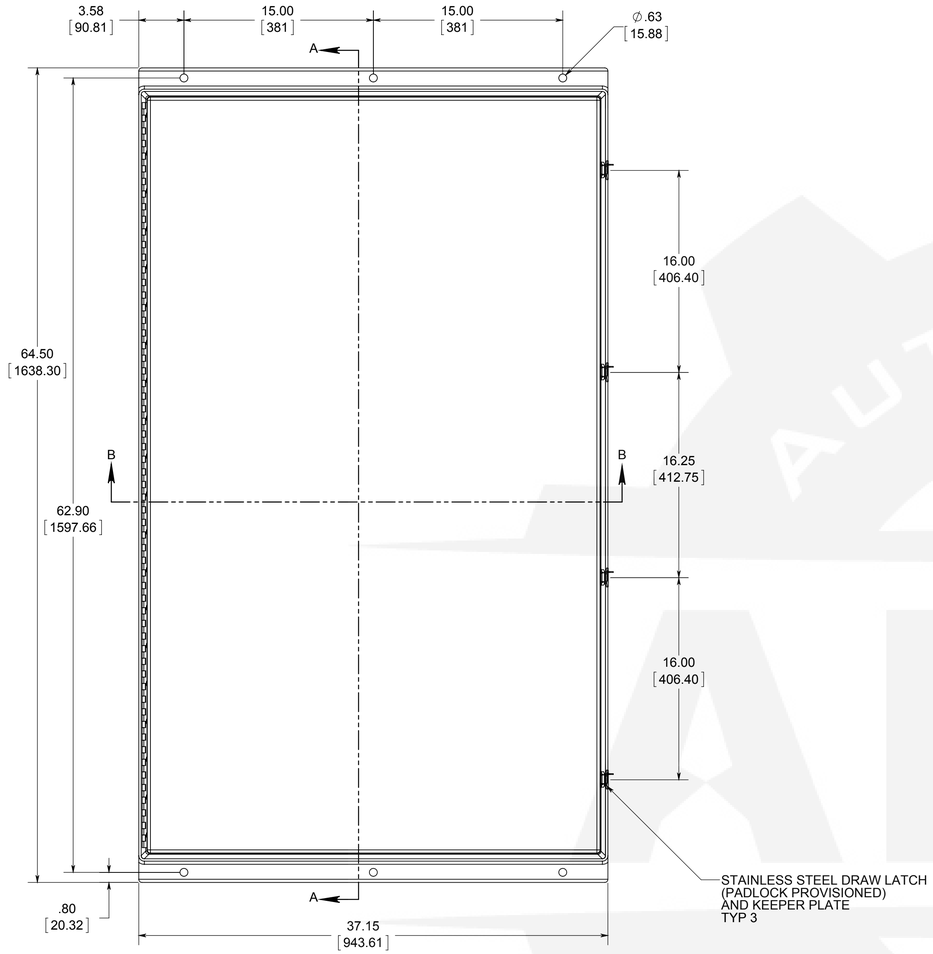

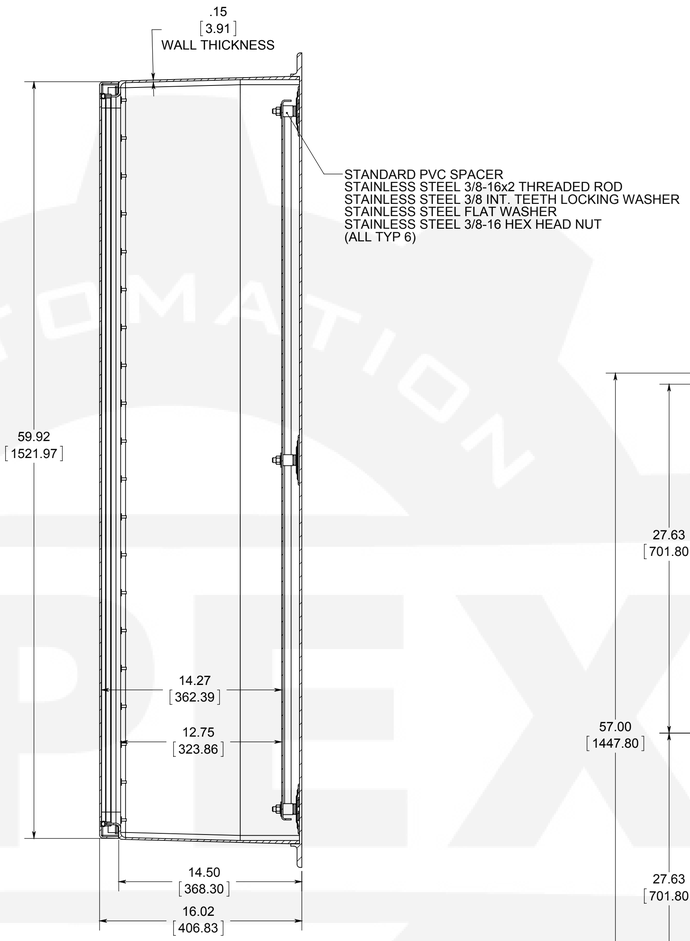

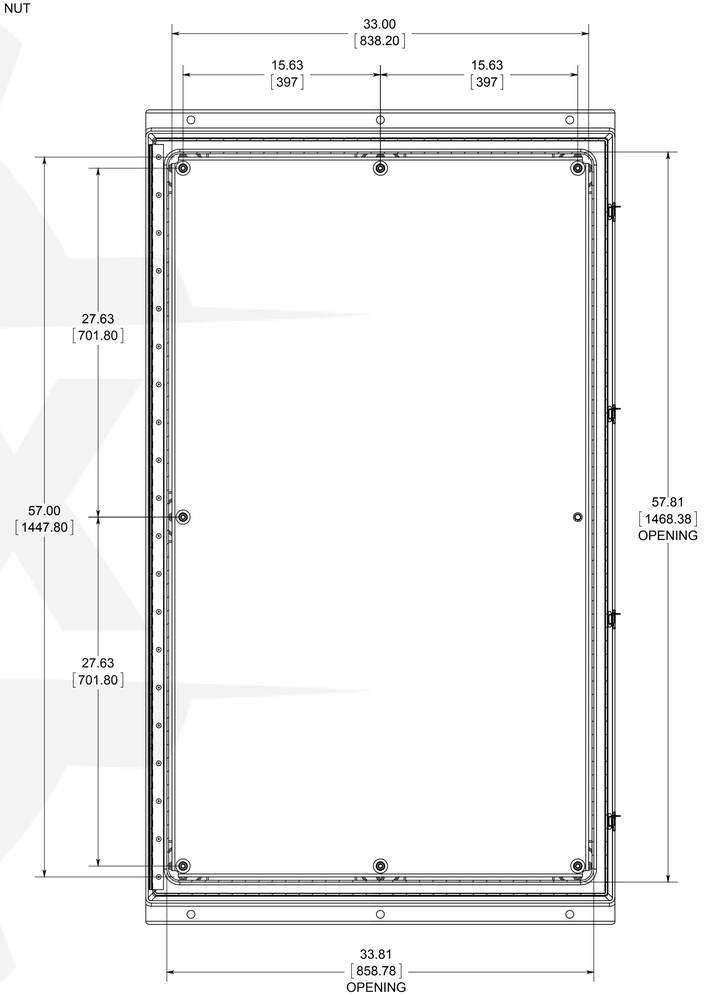

SECTION C-C
TOP VIEW WITH LID AND GASKET REMOVED

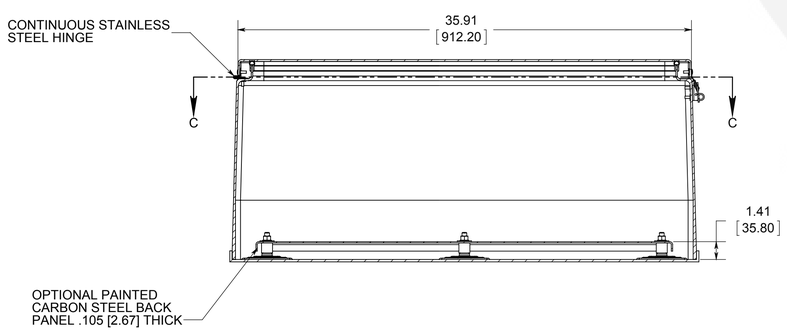

MATERIAL:
BOX- GEL-COAT, FIBERGLASS, RESIN
COVER- GEL-COAT, FIBERGLASS, RESIN
EDM GASKET SEAL

PART No. PJW603614L
for more information visit
www.hammfg.com
Data subject to change without notice

Drawing Not to Scale