ISSUE DATE: 07/18/2014

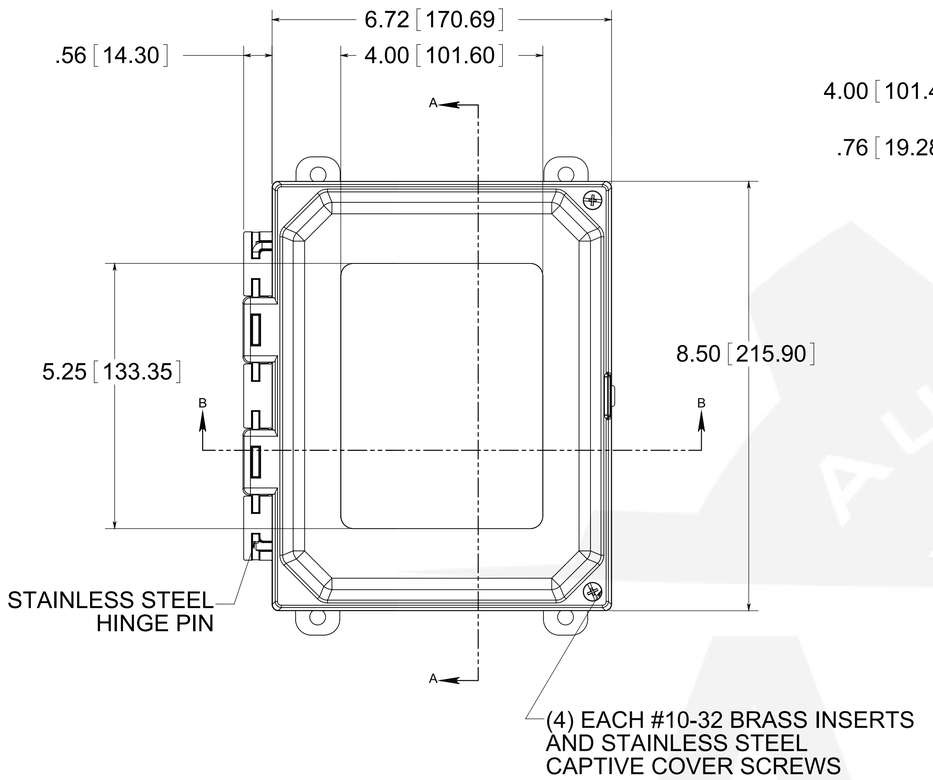

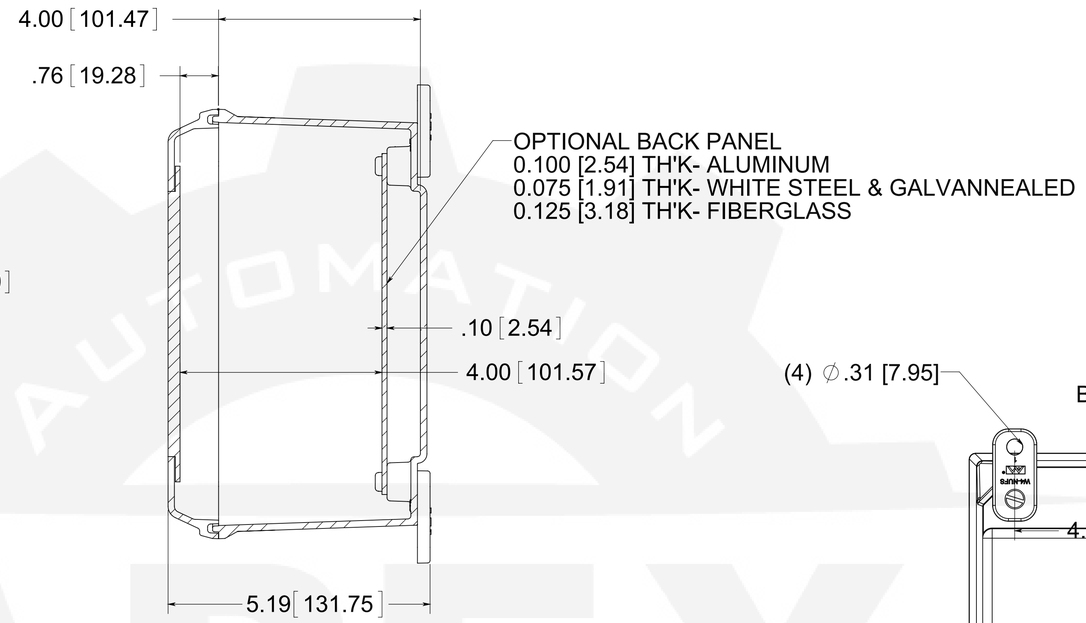

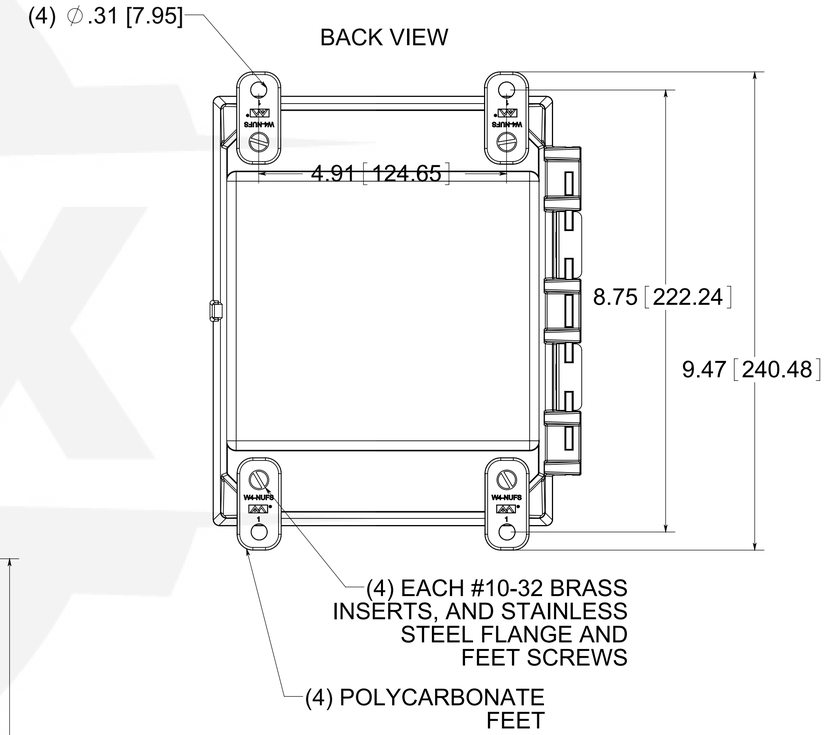

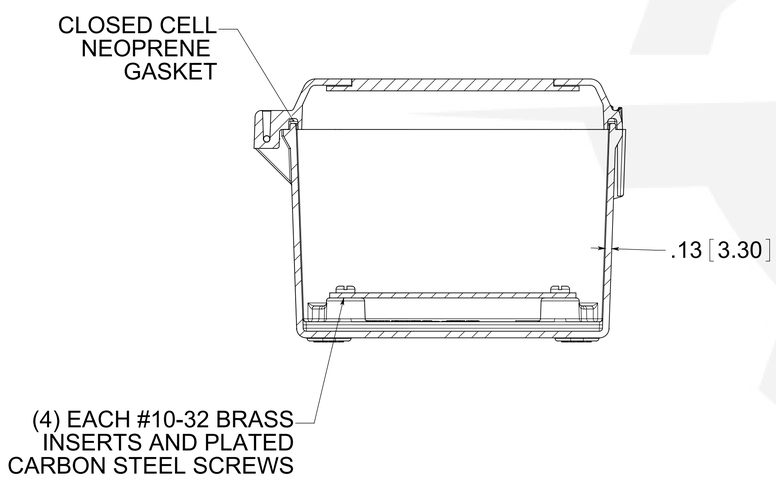

FRONT VIEW
WITH COVER REMOVED
AND BACK PANEL DISPLAYED

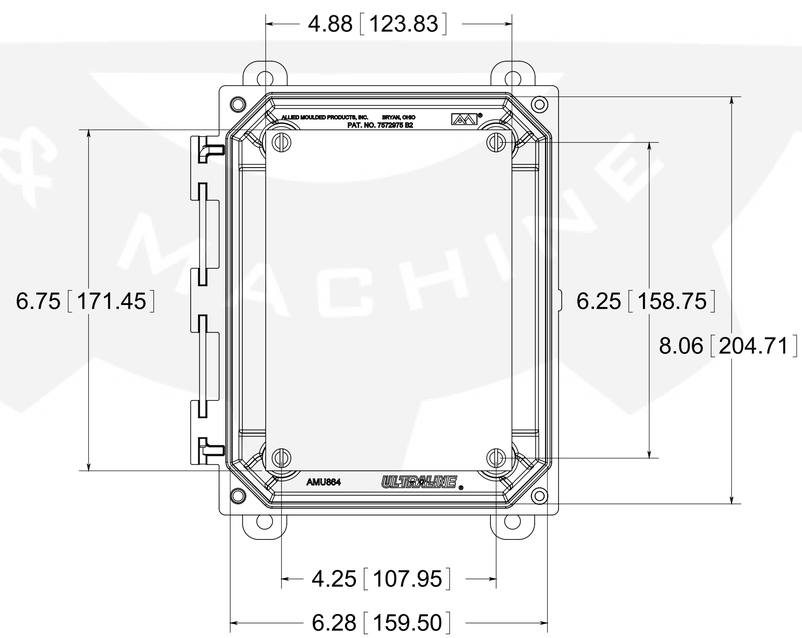

MATERIAL:
BOX- COMPRESSION MOLDED FIBERGLASS REINFORCED POLYESTER
COVER-COMPRESSION MOLDED FIBERGLASS REINFORCED POLYESTER
CLEAR COVER AND WINDOWS- POLYCARBONATE

PART No. PJU864HW
for more information visit
www.hammfg.com
Data subject to change without notice
Drawing Not to Scale