| Date | Rev | Description | ECN No. | DR | CK | REL |
|---|---|---|---|---|---|---|
| 10/24/19 | | INITIAL RELEASE | | | | |
| - | - | - | - | - | - | - |
| - | - | - | - | - | - | - |

ISSUE DATE:

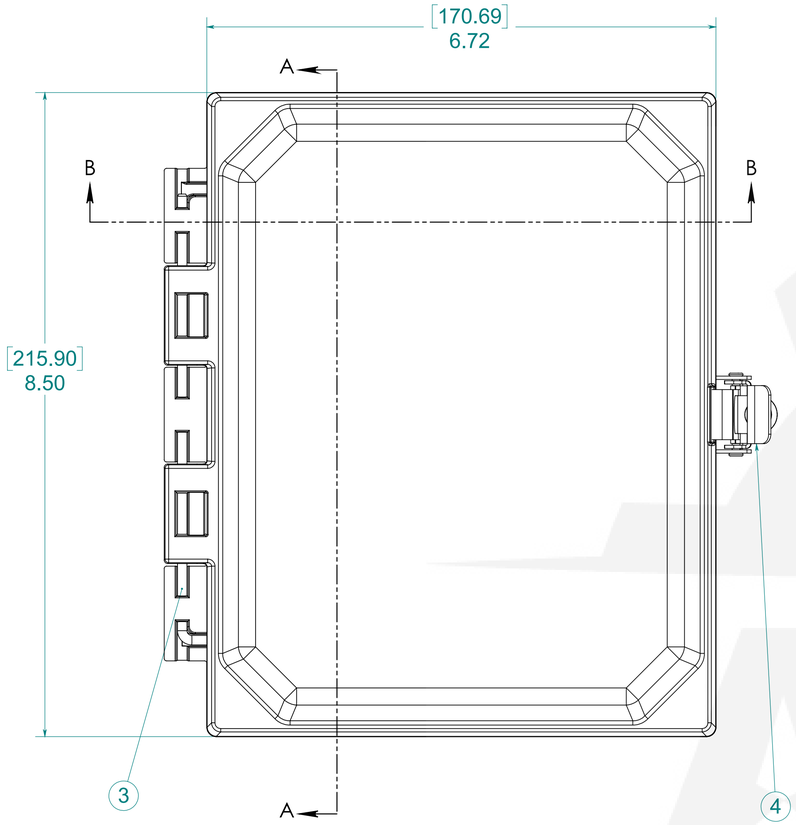


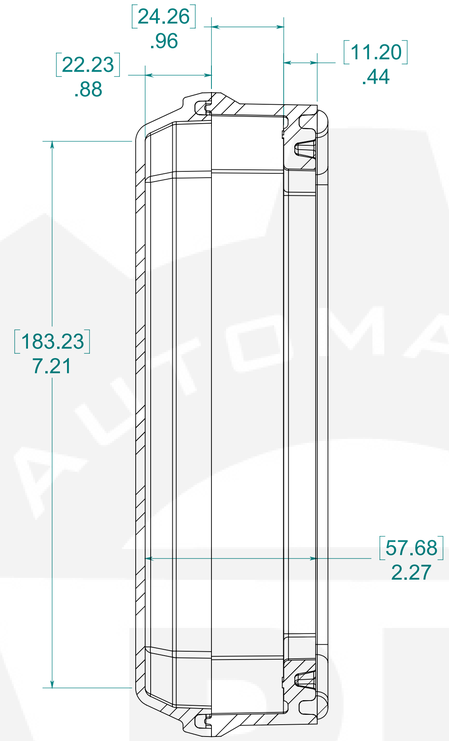


SECTION A-A

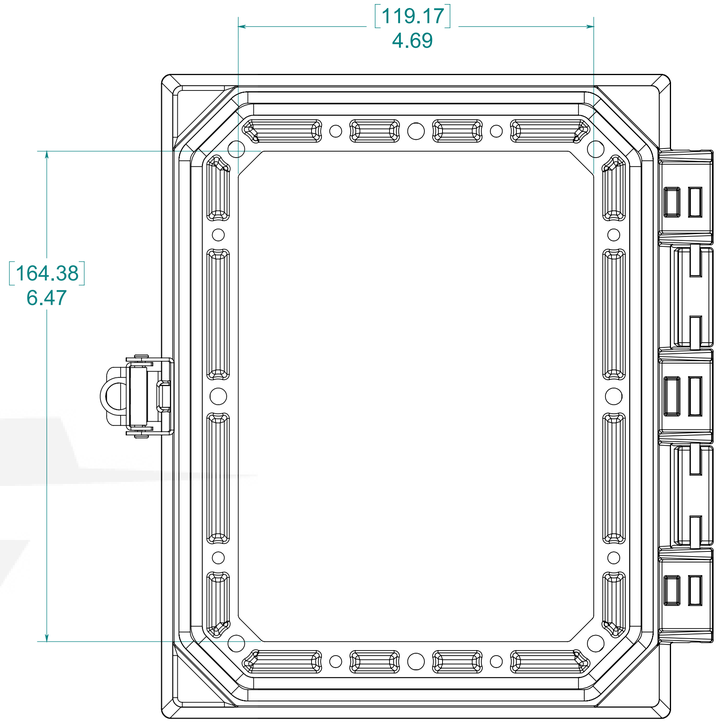


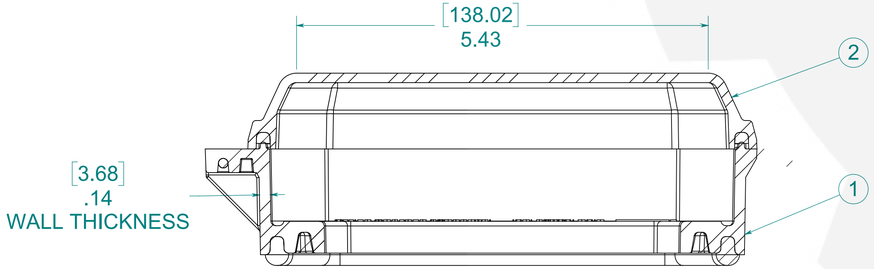


SECTION B-B

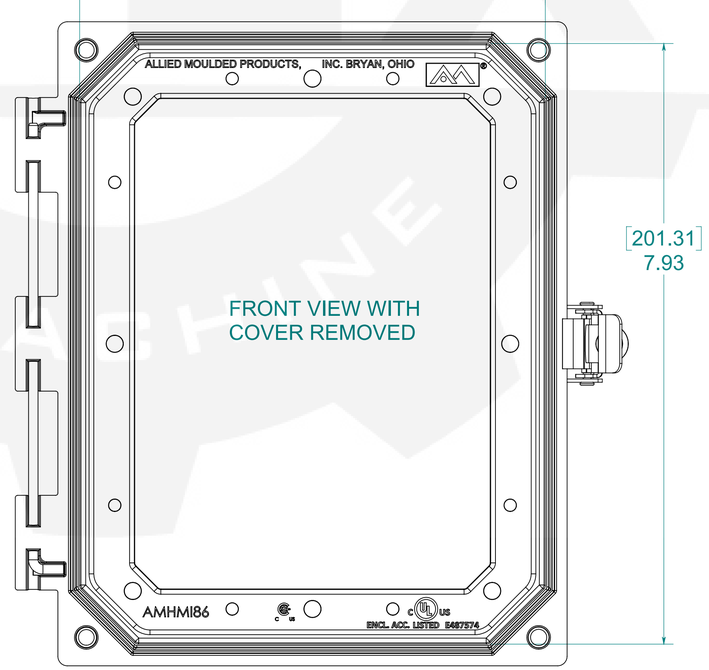


| ITEM NO. | PART NUMBER | DESCRIPTION | QTY. |
|---|---|---|---|
| 1 | WGF86 | WIP FIP 86 HMI FRAME | 1 |
| 2 | WGP86C | WIP FIP CVR POLY OPAQUE | 1 |
| 3 | 70-HPIN8316 | HINGE PIN | 1 |
| 4 | 70-HMISSLCH316 | HMI - UNDER CENTER LATCH | 1 |

MATERIAL:
FRAME- INJECTED POLYCARBONATE
STANDARD COVER- INJECTED POLYCARBONATE
CLEAR COVER- INJECTED POLYCARBONATE

PART No. PJHMI86L

for more information visit
www.hammfg.com
Data subject to change without notice

Drawing Not to Scale