Date	Rev	Description	ECN No.	DR	CK	REL
10/24/19		INITIAL RELEASE				
-	-	-	-	-	-	-
-	-	-	-	-	-	-

ISSUE DATE:

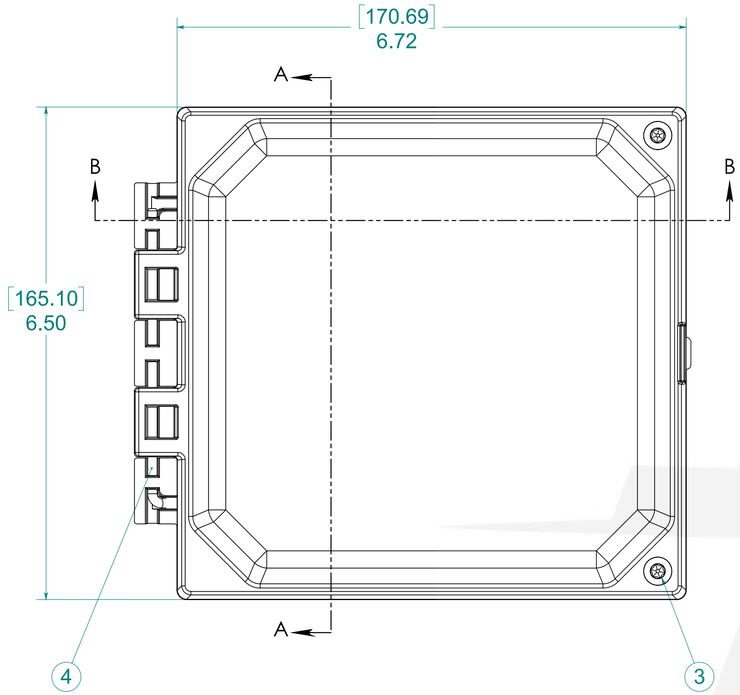

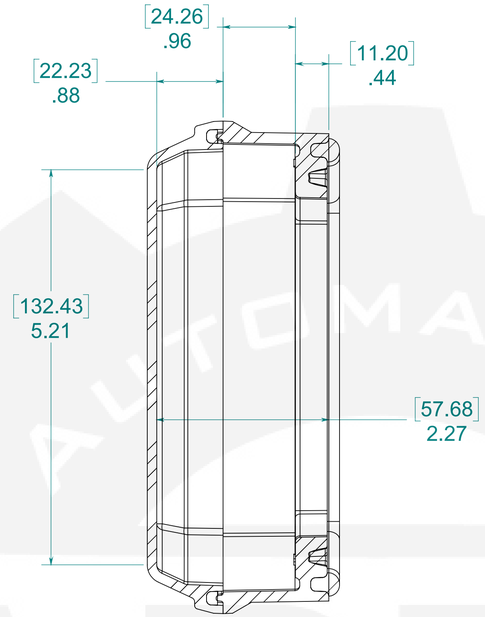

SECTION A-A

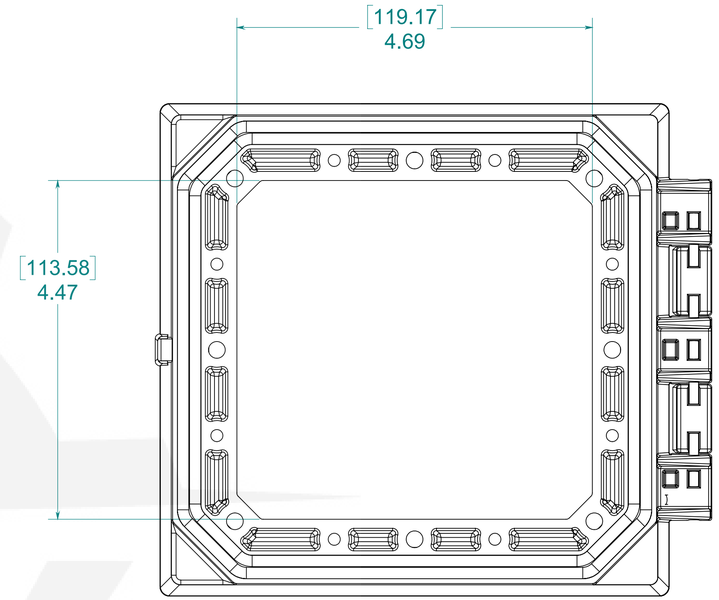

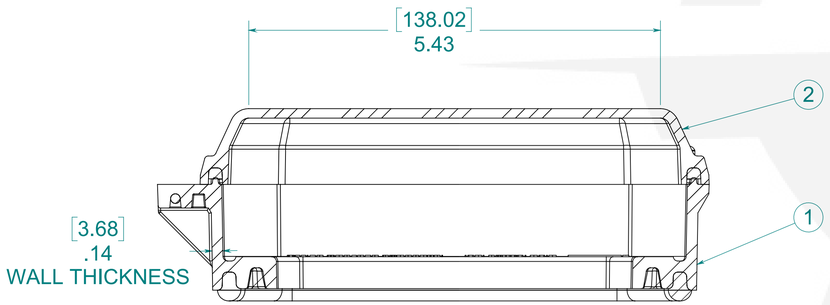

SECTION B-B

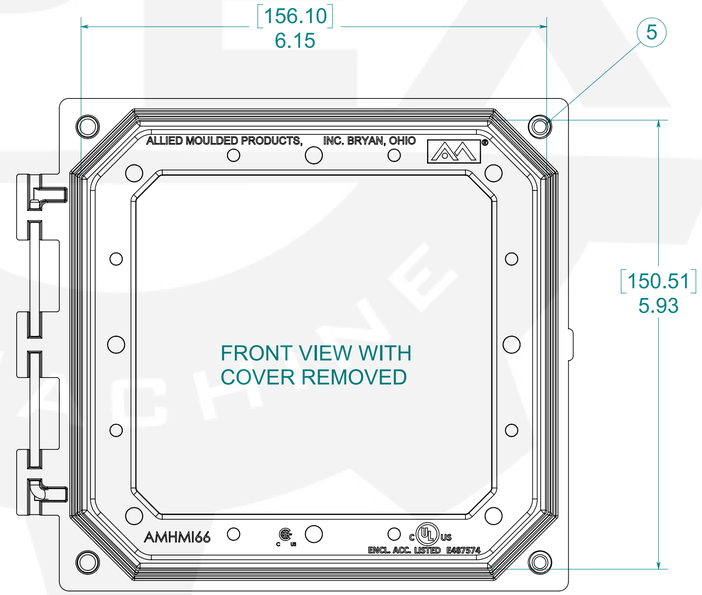

ITEM NO.	PART NUMBER	DESCRIPTION	QTY.
1	WGF66	WIP FIP 66 HMI FRAME	1
2	WGP66C	WIP FIP CVR POLY OPAQUE	1
3	CMSO316TP	TAMPER PROOF SCREW WITH O-RING	2
4	70-HPIN6316	HINGE PIN	1
5	70-60250	#10-32 THREADED INSERT	2

MATERIAL:
FRAME- INJECTED POLYCARBONATE
STANDARD COVER- INJECTED POLYCARBONATE
CLEAR COVER- INJECTED POLYCARBONATE

PART No. PJHMI66HTP

for more information visit
www.hammfg.com
Data subject to change without notice

Drawing Not to Scale