ISSUE DATE: 06/13/2014

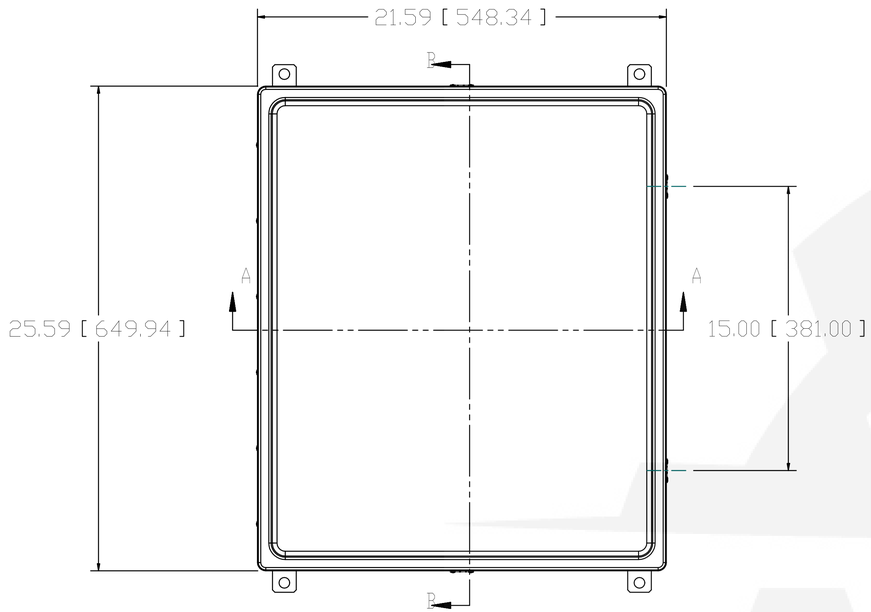

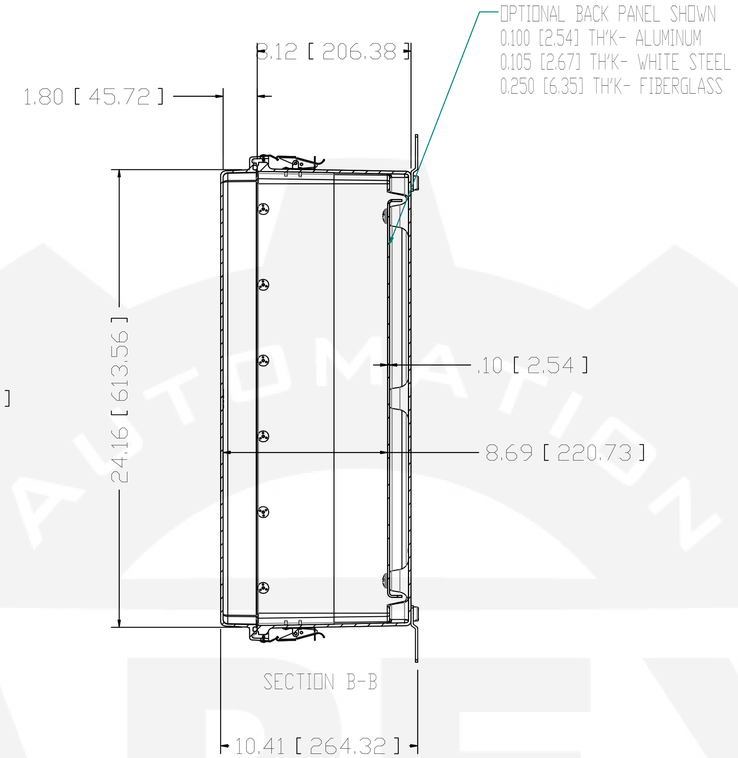

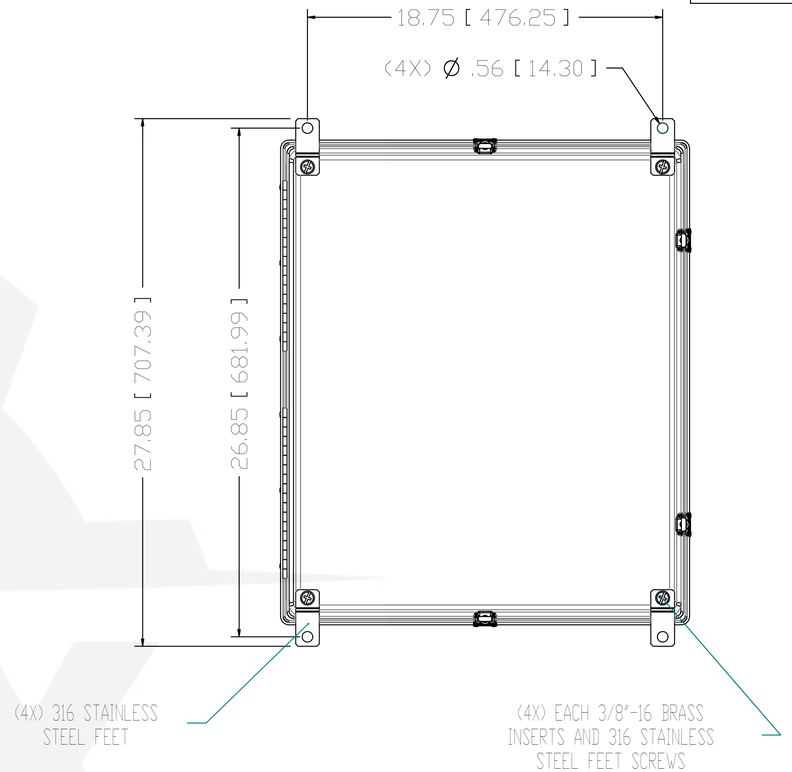

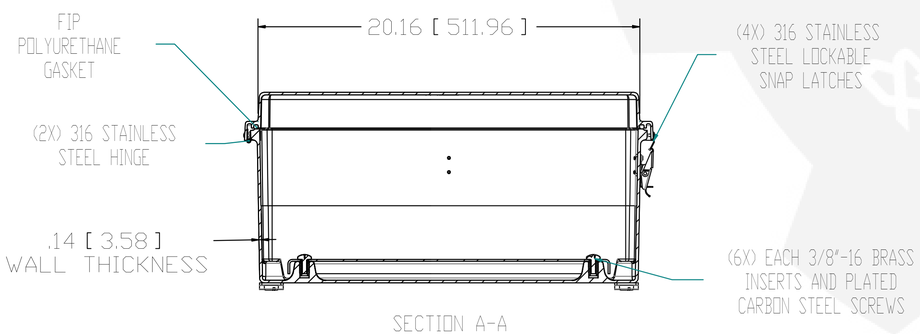

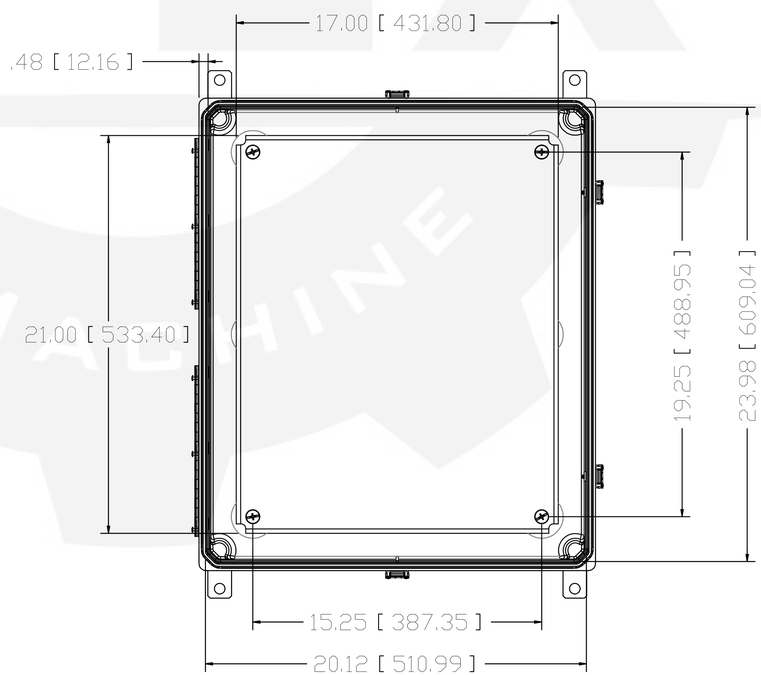

NOTE:
1. DATA SUBJECT TO CHANGE WITHOUT NOTICE

MATERIAL:
BOX- COMPRESSION MOLDED FIBERGLASS REINFORCED POLYESTER
COVER- COMPRESSION MOLDED FIBERGLASS REINFORCED POLYESTER
WINDOW- POLYCARBONATE

PART No. PJ24208RL
for more information visit
www.hammfg.com
Data subject to change without notice

Drawing Not to Scale