ISSUE DATE: 06/09/2014

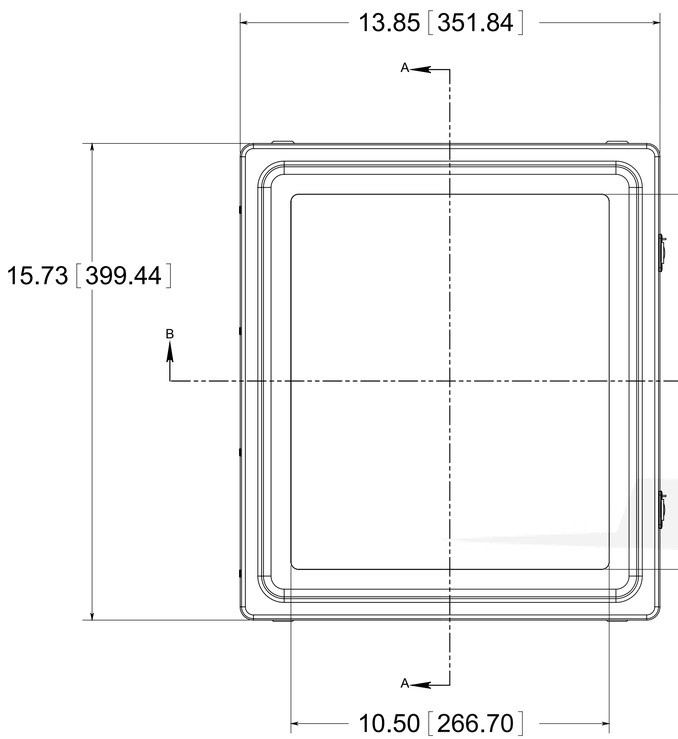

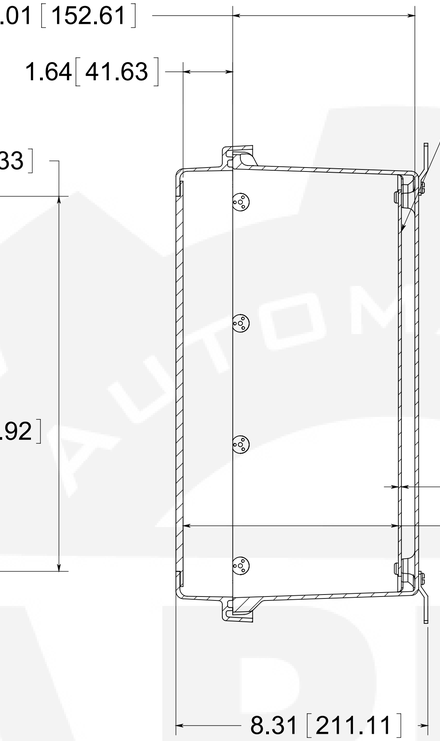

OPTIONAL BACK PANEL
0.100 [2.54] TH'K- ALUMINUM
0.075 [1.91] TH'K- WHITE STEEL & GALVANNEALED
0.125 [3.18] TH'K- FIBERGLASS

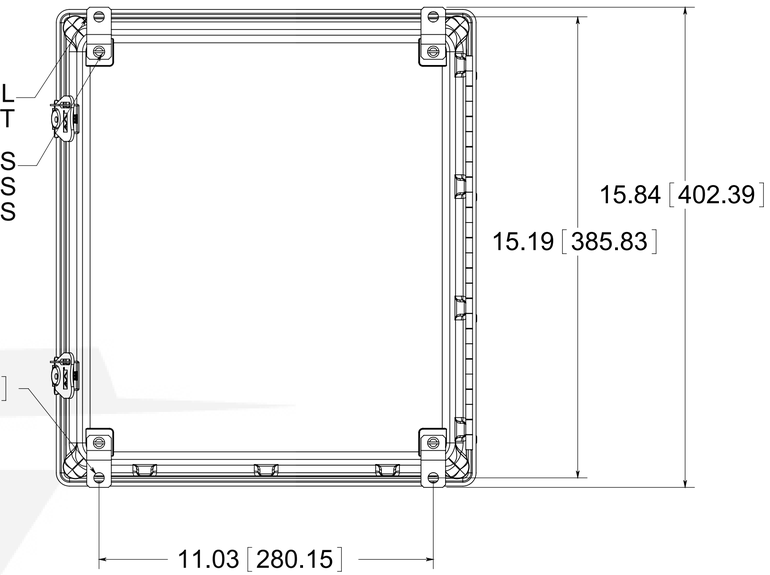

FRONT VIEW
WITH COVER REMOVED
AND BACK PANEL SHOWN

BACK VIEW

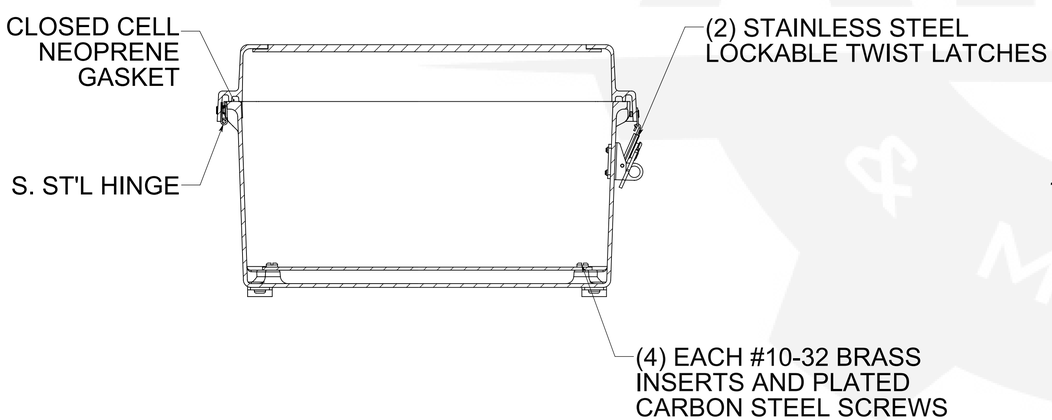

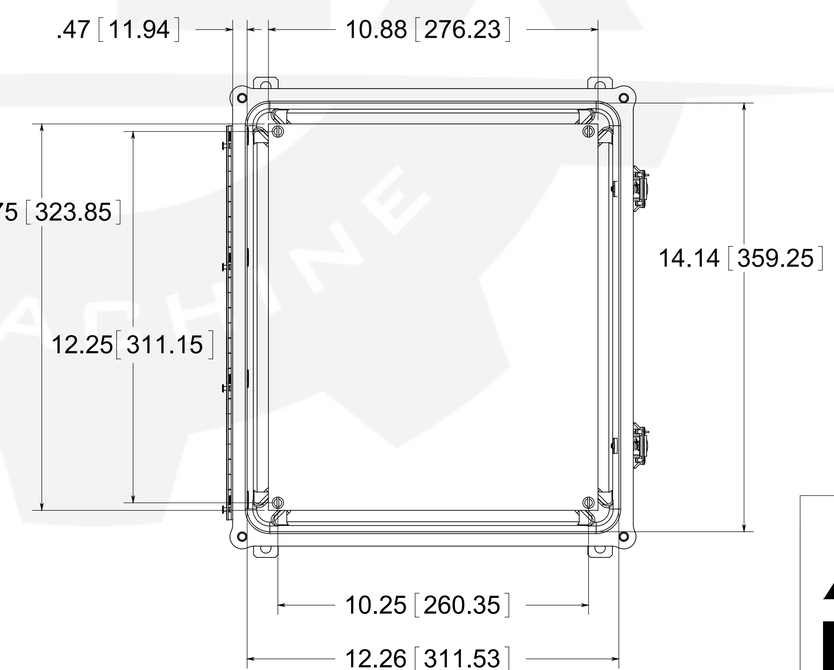

MATERIAL:
BOX- COMPRESSION MOLDED FIBERGLASS REINFORCED POLYESTER
COVER- COMPRESSION MOLDED FIBERGLASS REINFORCED POLYESTER
WINDOW- POLYCARBONATE

PART No. PJ14126RTW
for more information visit
www.hammfg.com
Data subject to change without notice
Drawing Not to Scale