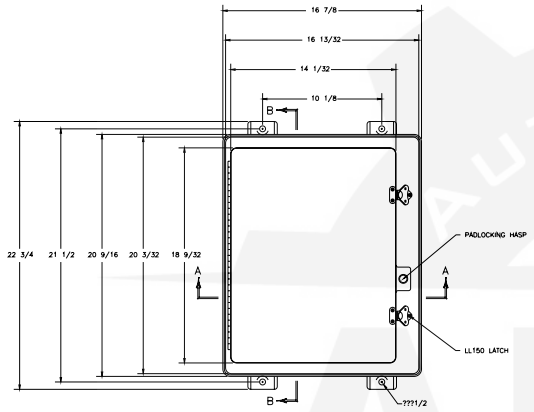

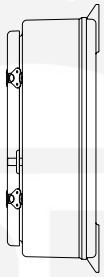

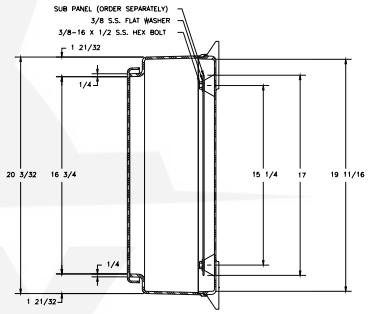

SECTION B-B

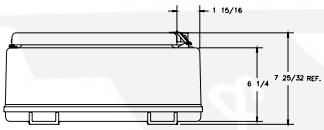

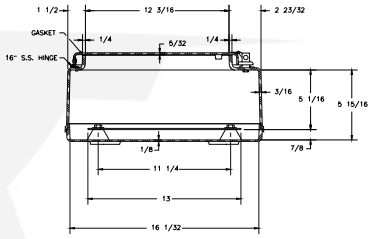

SECTION A-A

NOTES:

NEMA 4X

COLOR GLACIER GRAY RR1013

MATERIAL: F.R. POLYESTER FIBERGLASS

LET.	REVISION RECORD	DATE	BY	CHD.

DR. BY SH	DATE 03/26/92	
CHK. BY	DATE	
APD. BY	DATE	
SCALE DO NOT SCALE		

TOLERANCES UNLESS SPECIFIED: DECIMAL ± 0.10, FRACTIONAL ± 1/32

CUSTOMER

AutoCAD DWG. FILE

PART NAME: ENCLOSURE

PART NO. PHW20166