Date	Rev	Description	ECN No.	DR	CK	REL
08/02/2019		INITIAL RELEASE	ECN-314	DJL	SRH	GEL
-	-	-	-	-	-	-
-	-	-	-	-	-	-

ISSUE DATE:

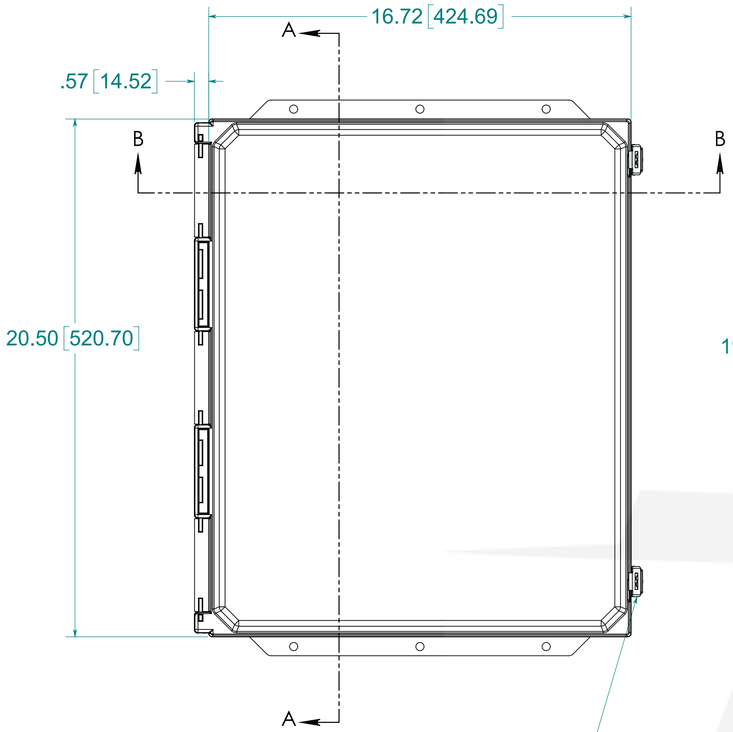

(2X) 316 STAINLESS STEEL LOCKABLE SNAP LATCH

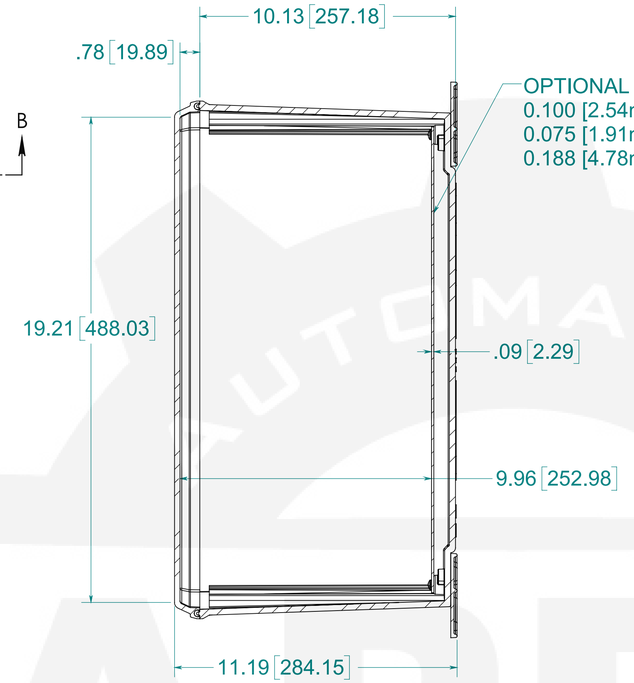

OPTIONAL BACK PANEL SHOWN
0.100 [2.54mm] TH'K- ALUMINUM
0.075 [1.91mm] TH'K- WHITE STEEL
0.188 [4.78mm] TH'K- PVC

SECTION A-A

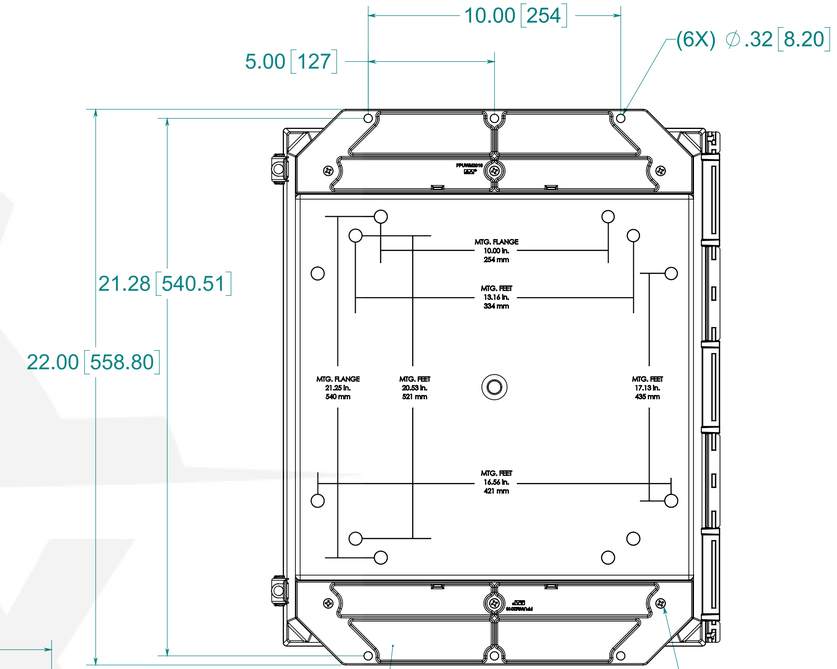

(2X) POLYCARBONATE FLANGE

(6X) EACH #10-32 BRASS INSERTS AND 316 STAINLESS STEEL FLANGE SCREWS

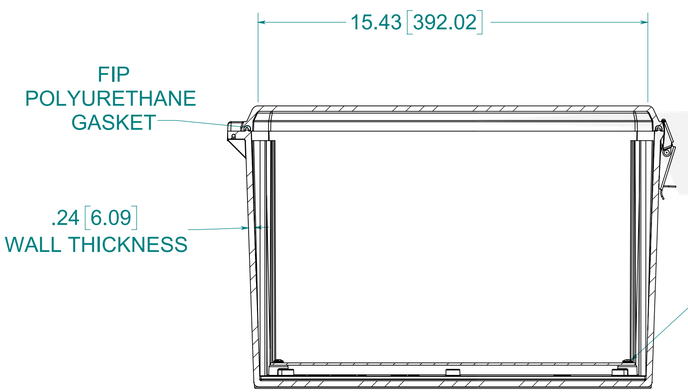

SECTION B-B

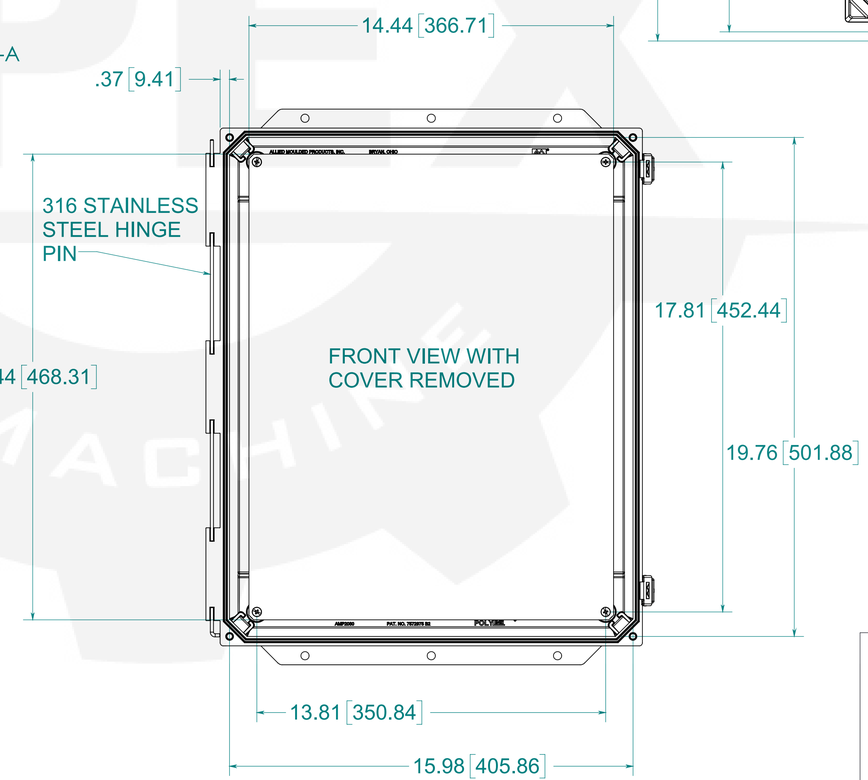

FRONT VIEW WITH COVER REMOVED

NOTE:
1. DATA SUBJECT TO CHANGE WITHOUT NOTICE.

MATERIAL:
BOX- INJECTED POLYCARBONATE
STANDARD COVER- INJECTED POLYCARBONATE
CLEAR COVER- INJECTED POLYCARBONATE

PART No. PCJ201610CCLF

for more information visit
www.hammfg.com
Data subject to change without notice

Drawing Not to Scale