ISSUE DATE: 06/25/2014

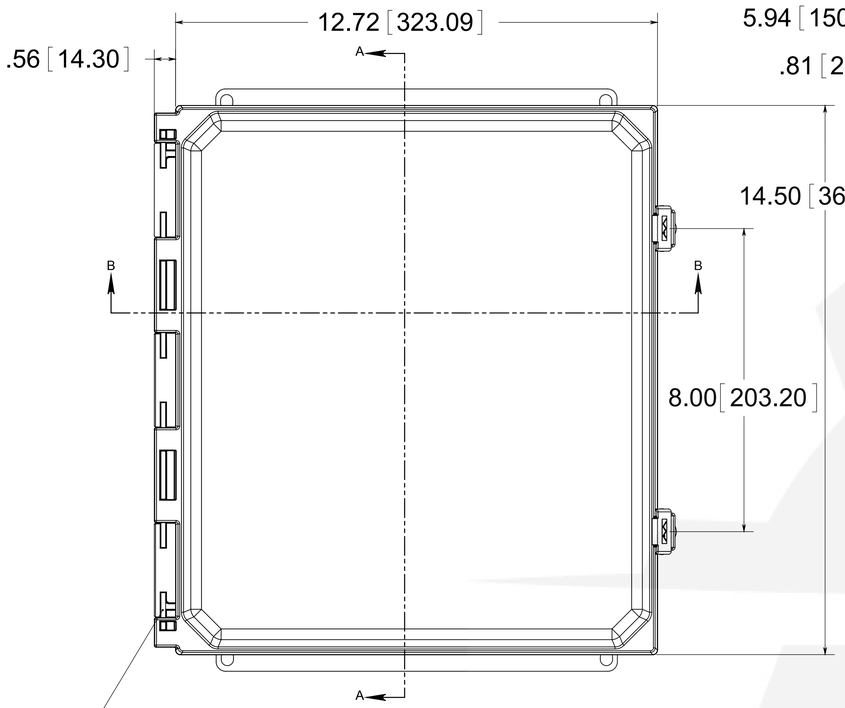

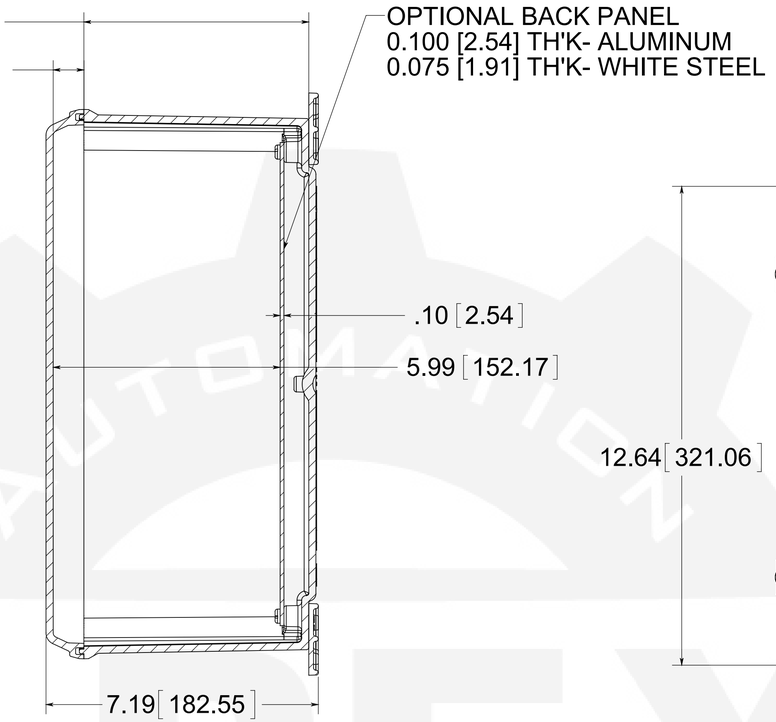

SECTION A-A

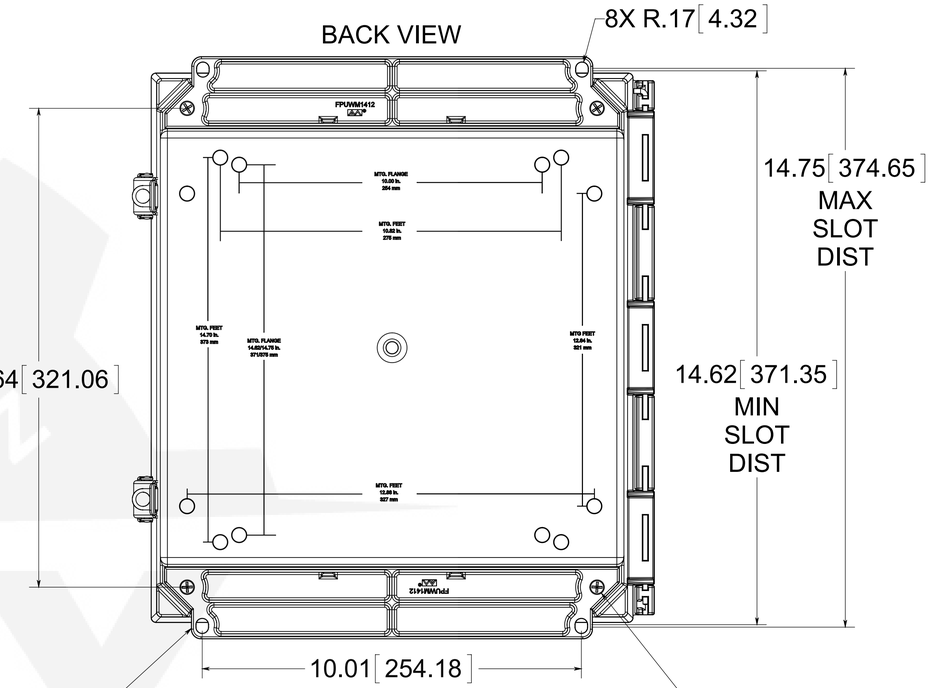

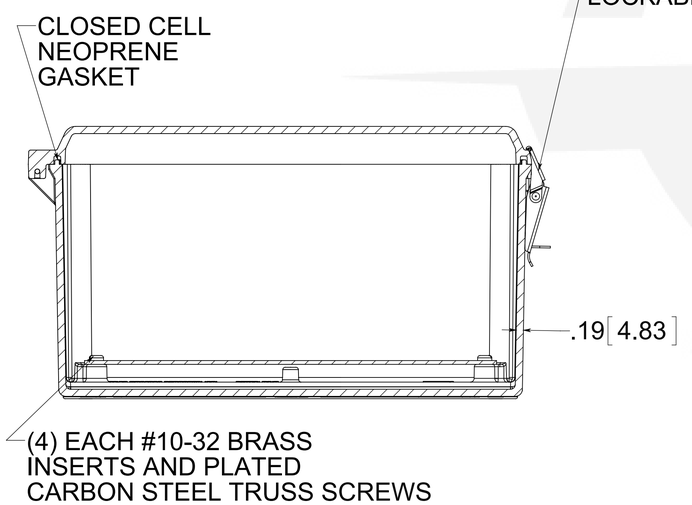

SECTION B-B

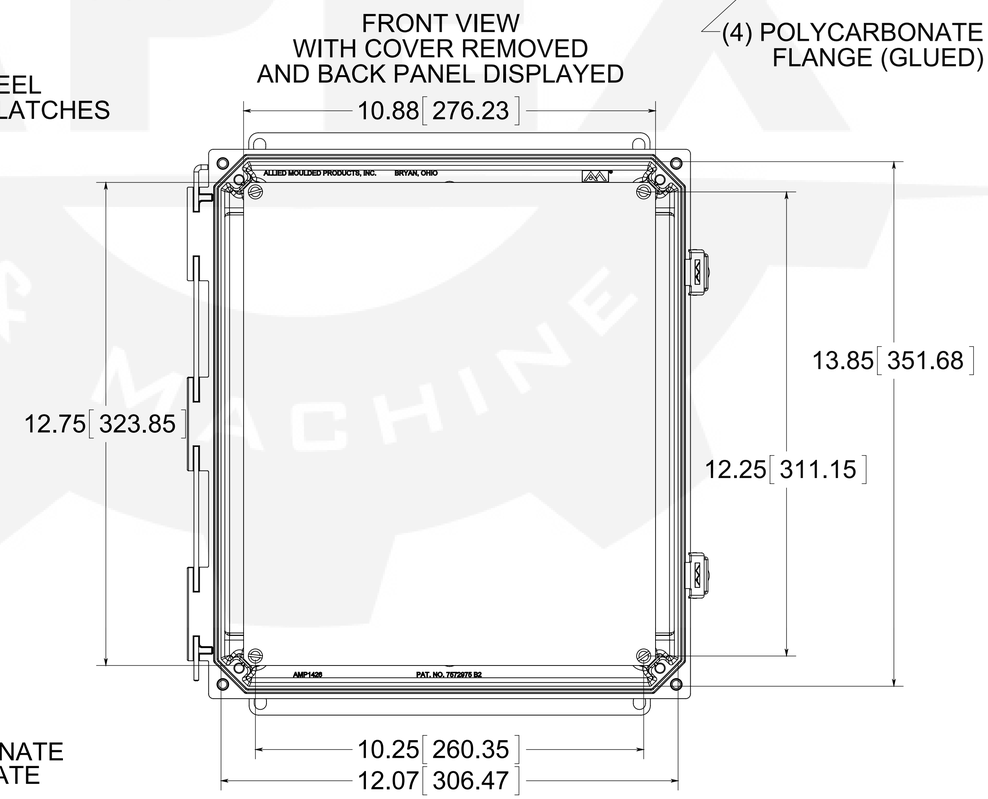

MATERIAL:
BOX- INJECTED POLYCARBONATE
STANDARD COVER- INJECTED POLYCARBONATE
CLEAR COVER - INJECTED POLYCARBONATE

PART No. PCJ14126CCLF
for more information visit
www.hammfg.com
Data subject to change without notice

Drawing Not to Scale