Date	Rev	Description	ECN No.	DR	CK	REL
07/25/2019		INITIAL RELEASE	ECN-302	DJL	LJS	GEL
-	-	-	-	-	-	-
-	-	-	-	-	-	-

ISSUE DATE:

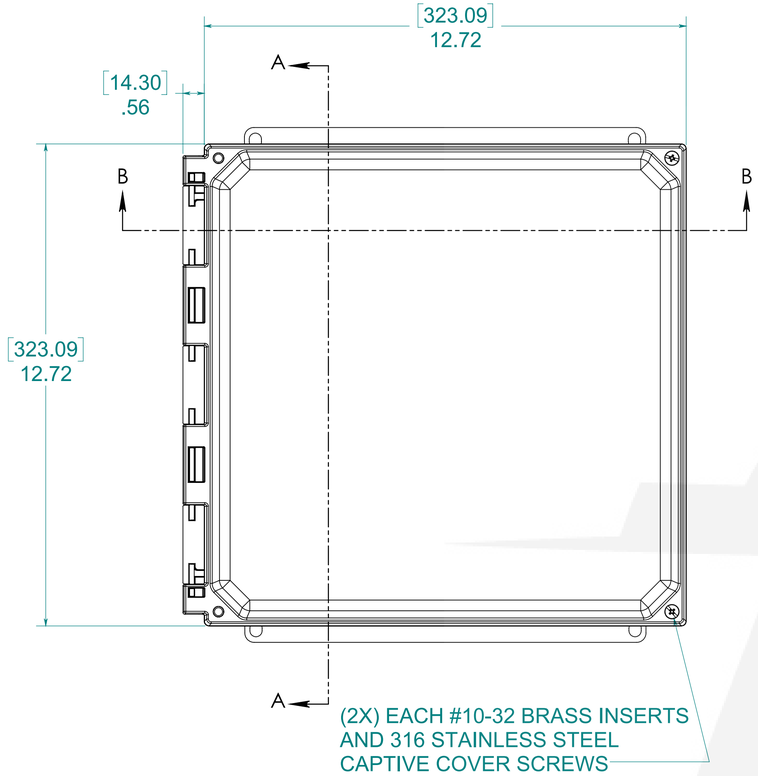

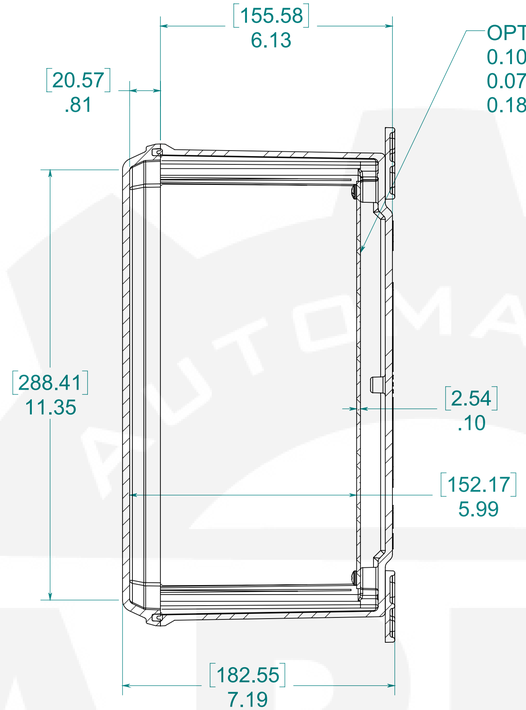

SECTION A-A

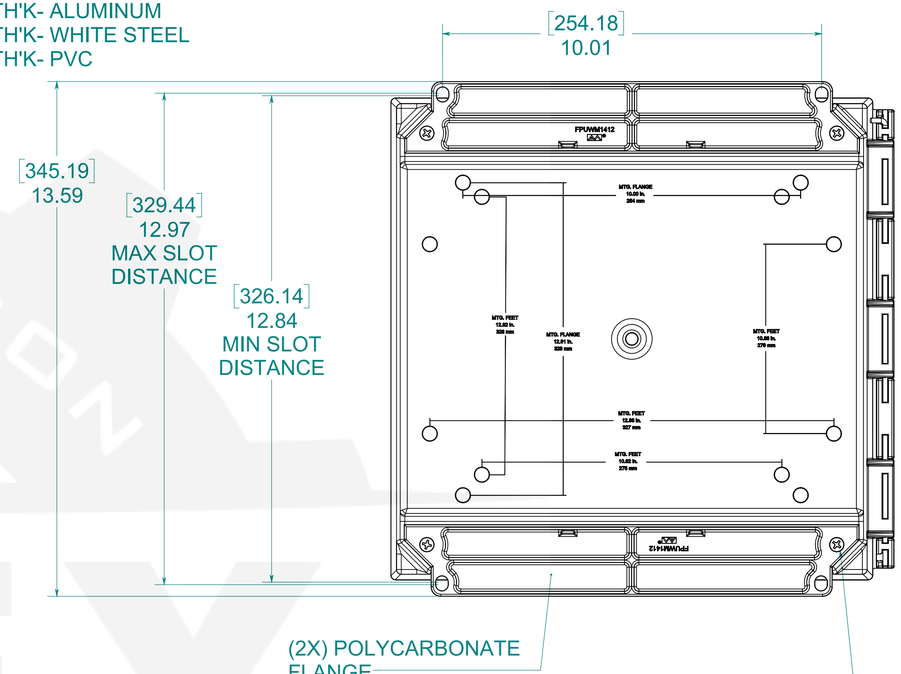

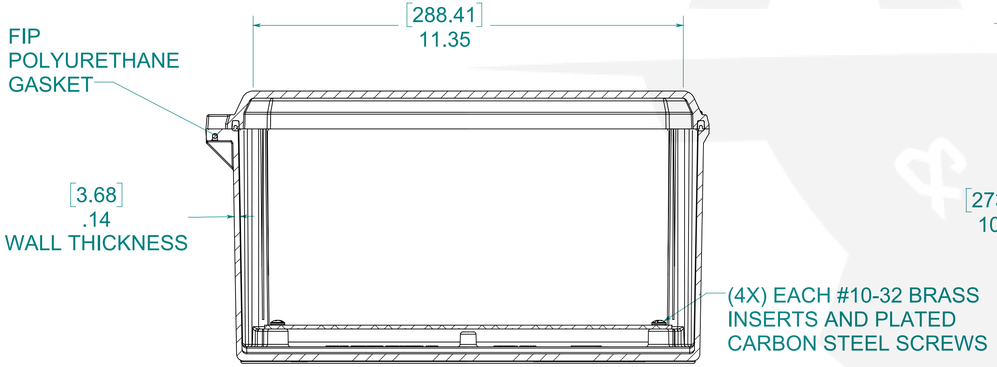

SECTION B-B

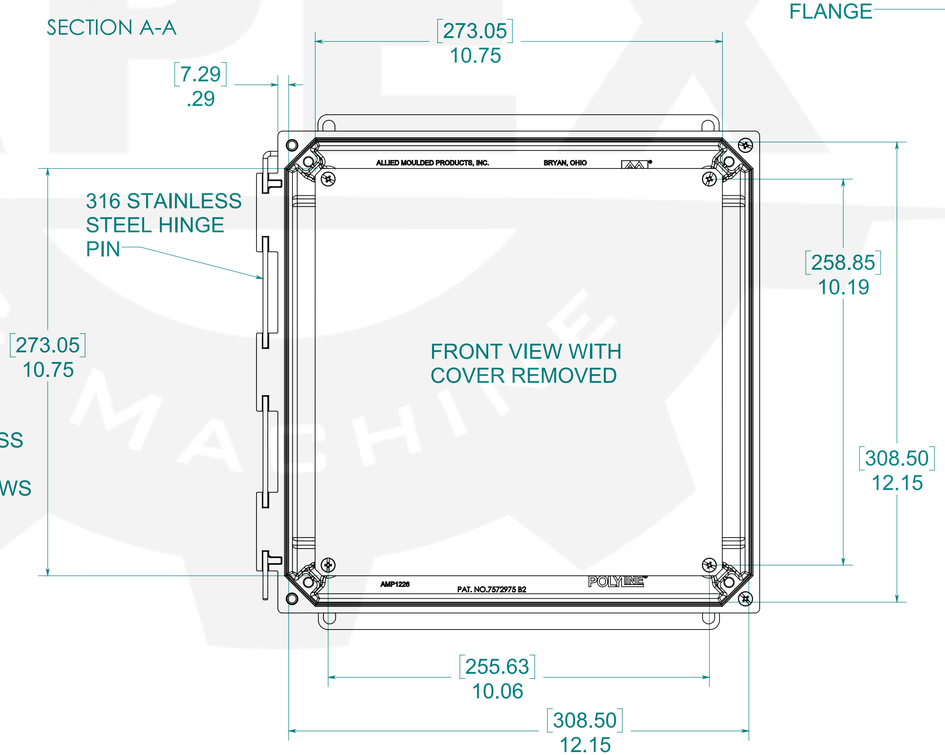

NOTE:
1. DATA SUBJECT TO CHANGE WITHOUT NOTICE

MATERIAL:
BOX- INJECTED POLYCARBONATE
STANDARD COVER- INJECTED POLYCARBONATE
CLEAR COVER- INJECTED POLYCARBONATE

PART No. PCJ12126HF

for more information visit
www.hammfg.com
Data subject to change without notice

Drawing Not to Scale