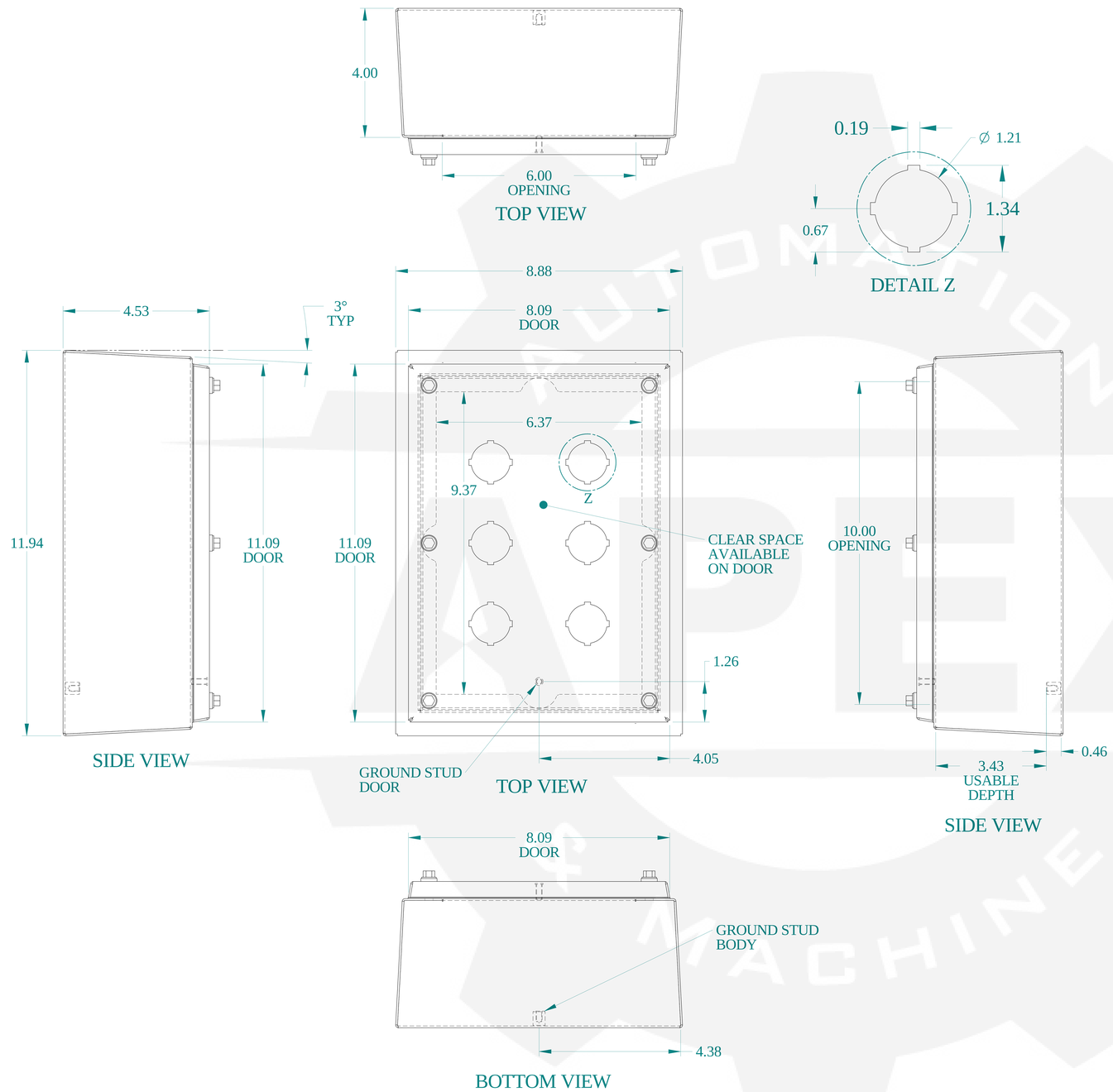

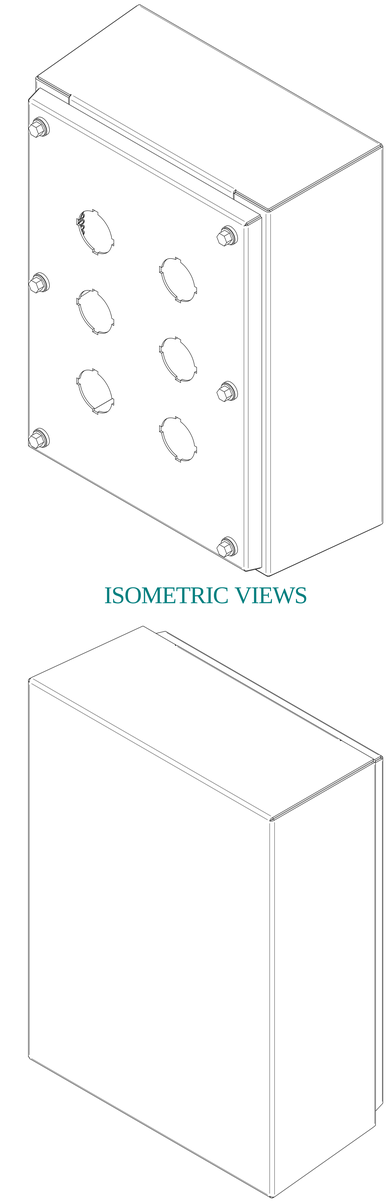

HAMMOND MANUFACTURING®

www.hammondmfg.com

Data subject to change without notice.

Part # : HYPB6SS	Date : Jan. 21, 2021

Link:www.hammfg.com/HYPB6SS