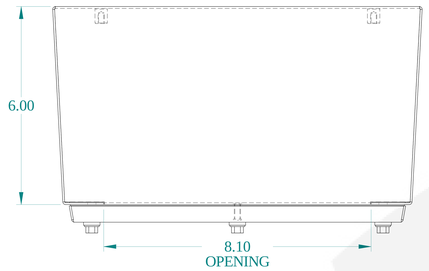

TOP VIEW

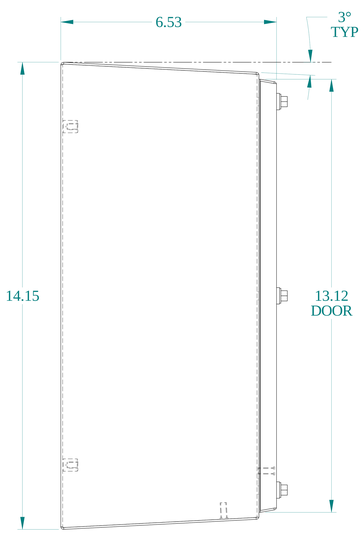

SIDE VIEW

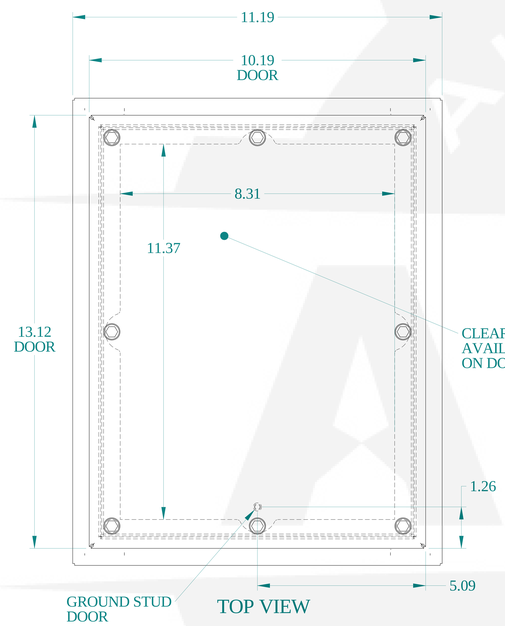

TOP VIEW

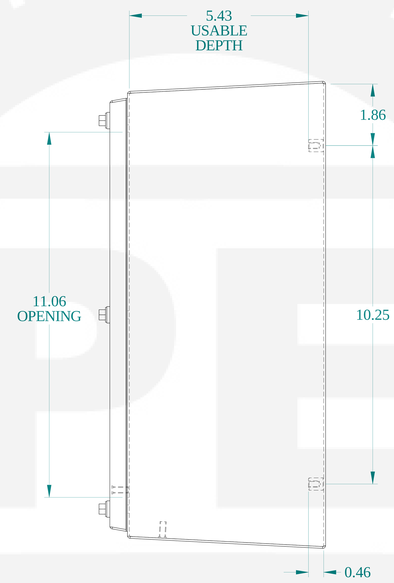

SIDE VIEW

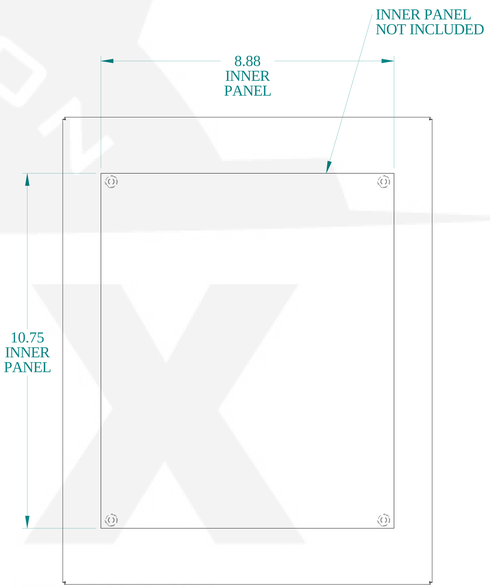

BACK VIEW

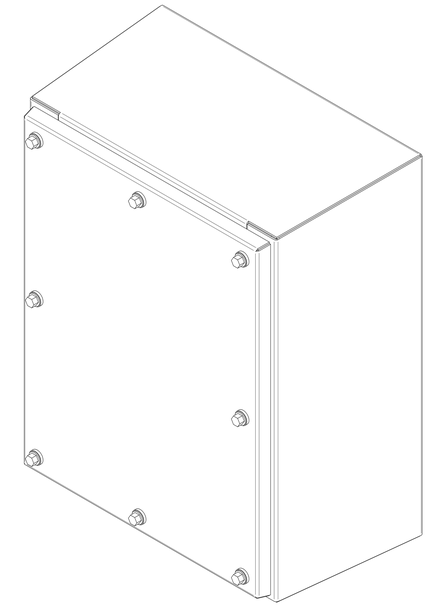

ISOMETRIC VIEWS

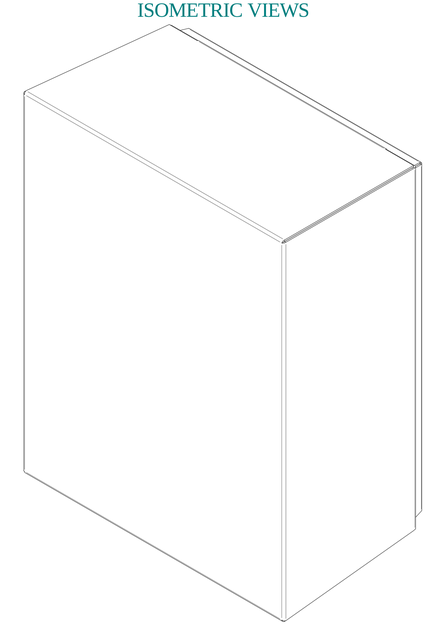

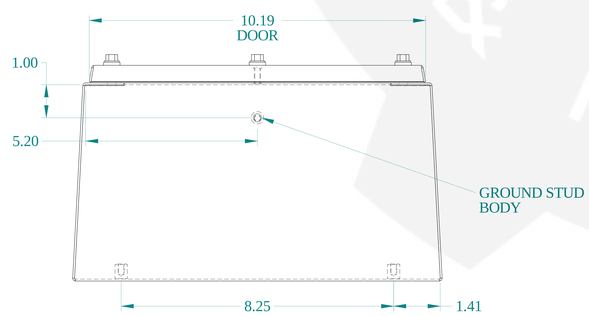

BOTTOM VIEW

HAMMOND MANUFACTURING®

www.hammondmfg.com

Data subject to change without notice.

Part # : HYJ14116SS	Date : Jan. 21, 2021

Link:www.hammfg.com/HYJ14116SS