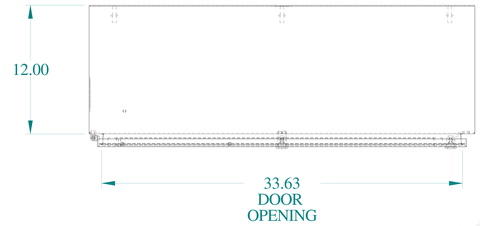

TOP VIEW

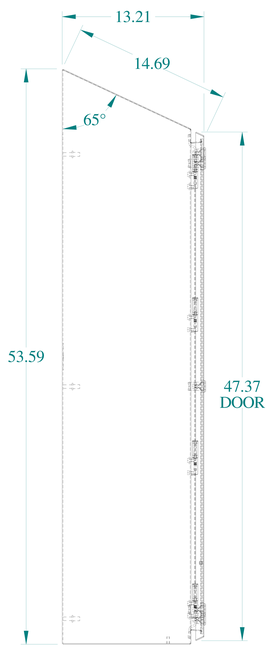

SIDE VIEW

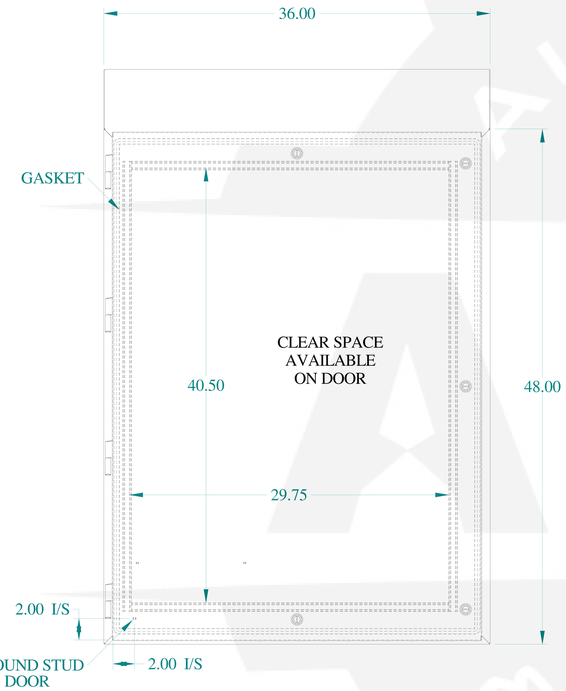

FRONT VIEW

SIDE VIEW

BACK VIEW

ISOMETRIC VIEWS

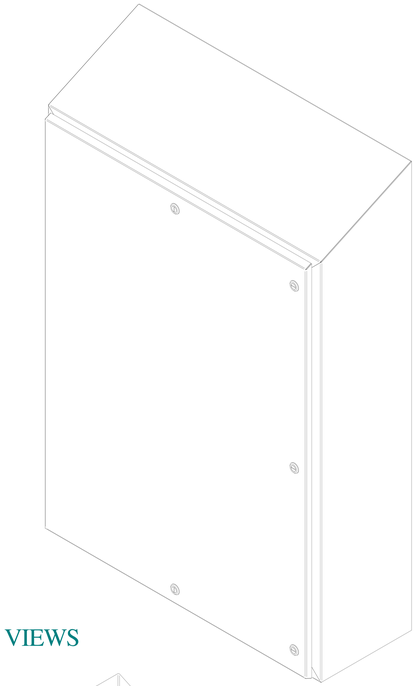

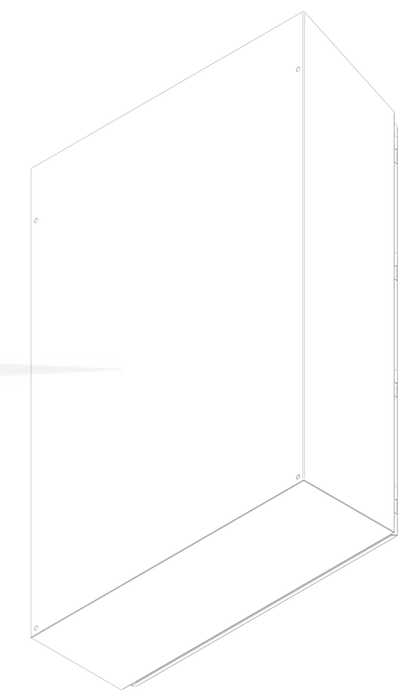

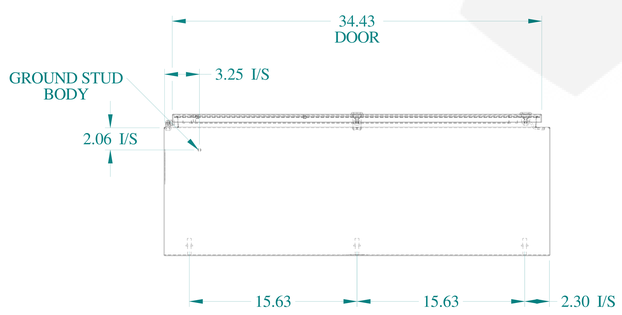

BOTTOM VIEW

HAMMOND MANUFACTURING®

www.hammondmfg.com

Data subject to change without notice.

Part # : HWST483612SS	Date : Mar. 16, 2020

Link:www.hammfg.com/HWST483612SS