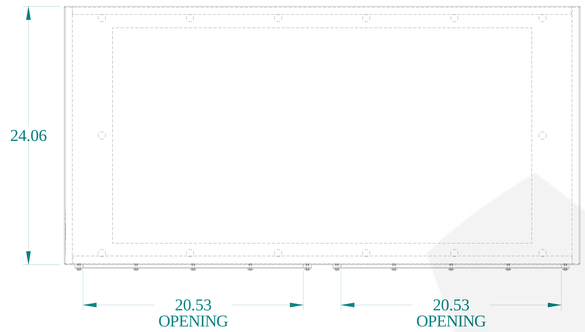

TOP VIEW

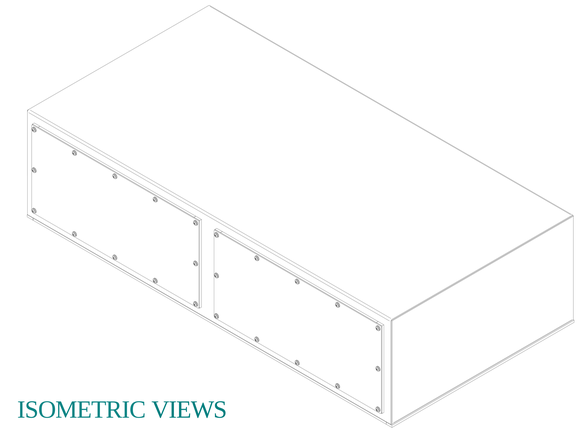

ISOMETRIC VIEWS

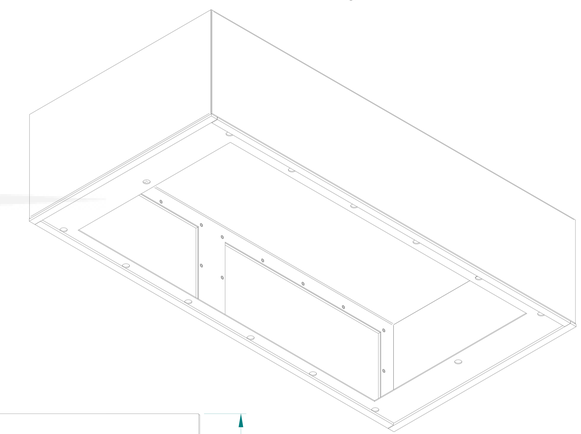

SIDE VIEW

FRONT VIEW

SIDE VIEW

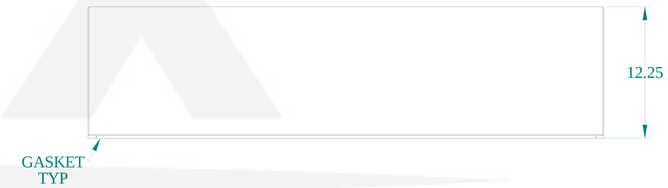

BACK VIEW

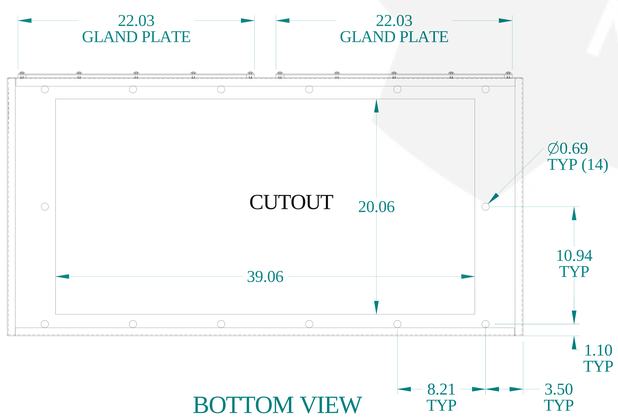

BOTTOM VIEW

HAMMOND MANUFACTURING®

www.hammondmfg.com

Data subject to change without notice.

Part # : HTH124824	Date : Apr. 2, 2019

Link:www.hammfg.com/HTH124824