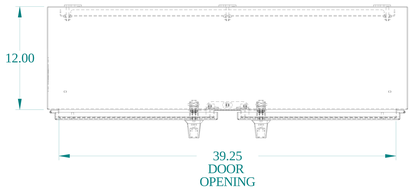


TOP VIEW

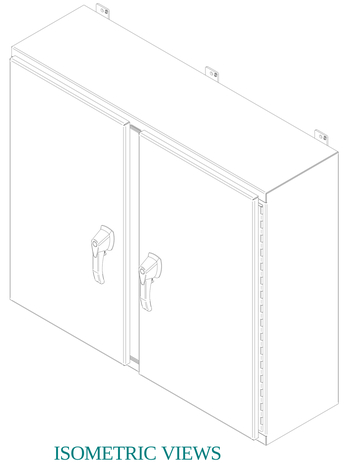

ISOMETRIC VIEWS

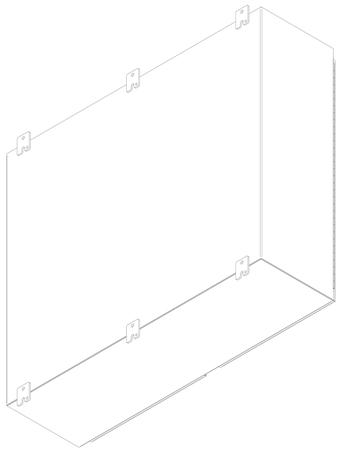

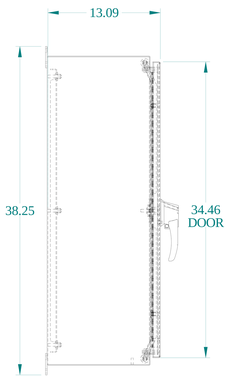


SIDE VIEW

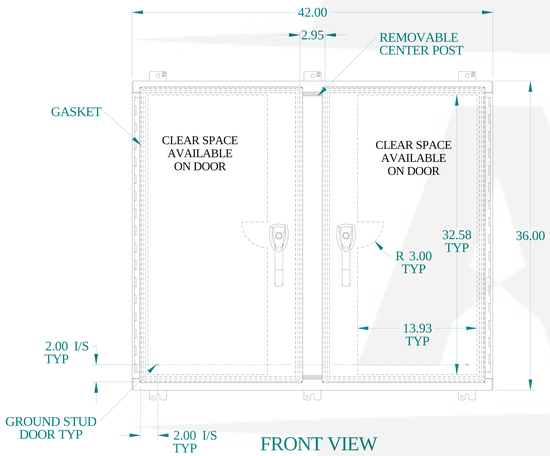


FRONT VIEW

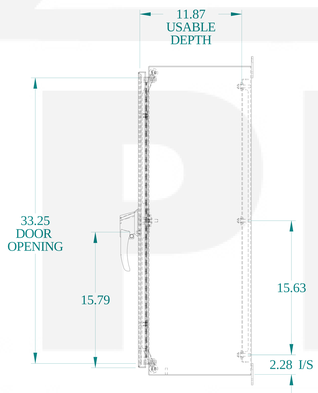


SIDE VIEW

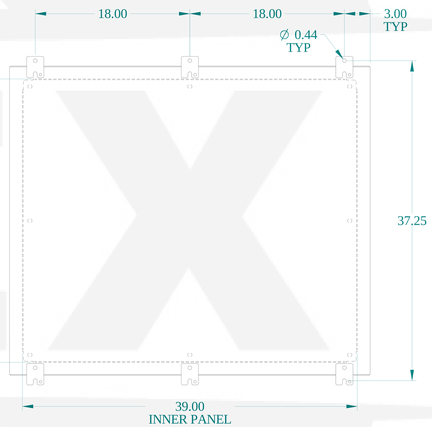


BACK VIEW

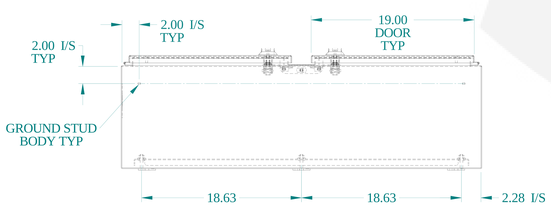


BOTTOM VIEW

HAMMOND MANUFACTURING®

www.hammondmfg.com

Data subject to change without notice.

| | |
|---|---|
| Part # : HN4WM364212GY | Date : Apr. 2, 2019 |

Link:www.hammfg.com/HN4WM364212GY