TOP VIEW

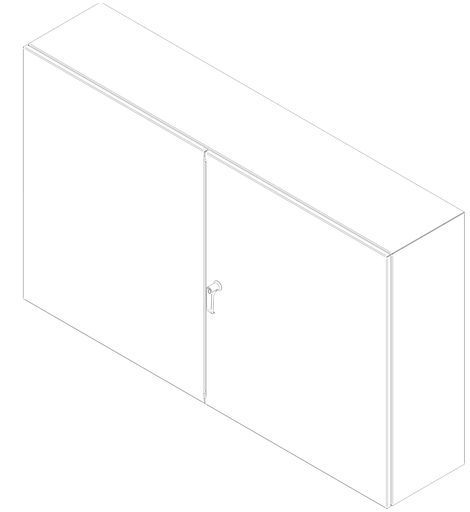

ISOMETRIC VIEWS

SIDE VIEW

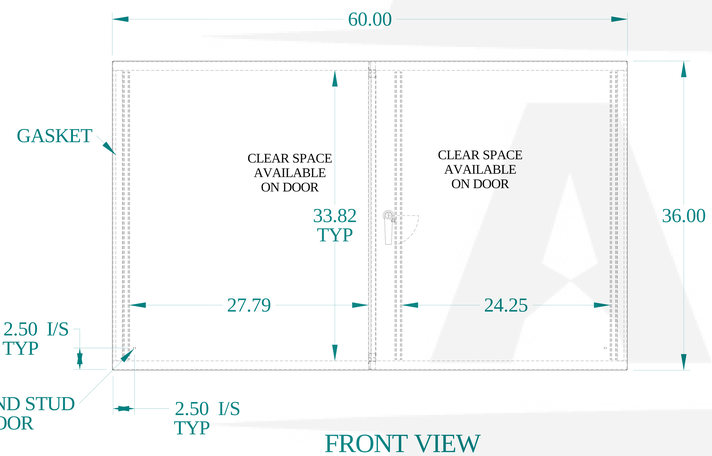

FRONT VIEW

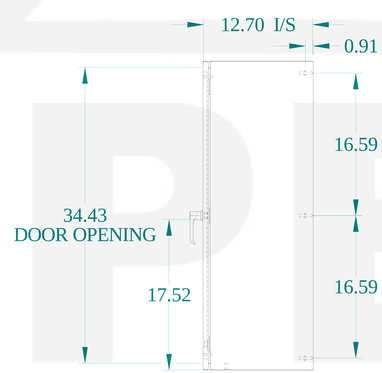

SIDE VIEW

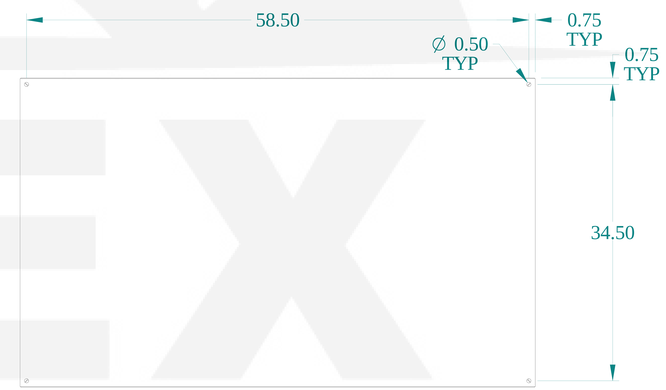

BACK VIEW

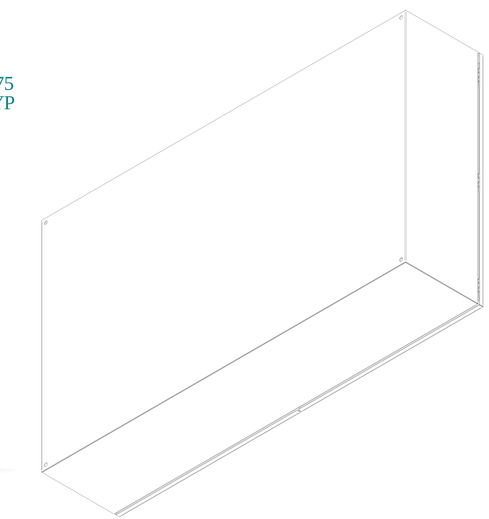

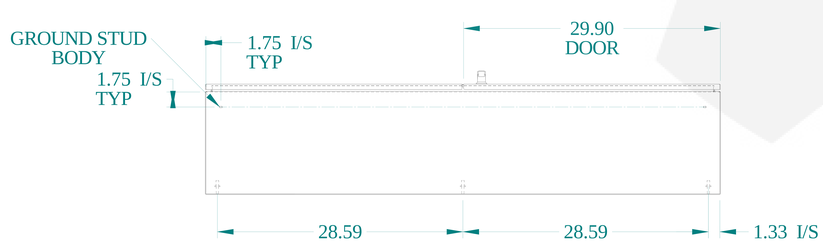

BOTTOM VIEW

HAMMOND MANUFACTURING®

www.hammondmfg.com

Data subject to change without notice.

Part # : EN4TD366012GY	Date : Mar. 25, 2019

Link:www.hammfg.com/EN4TD366012GY