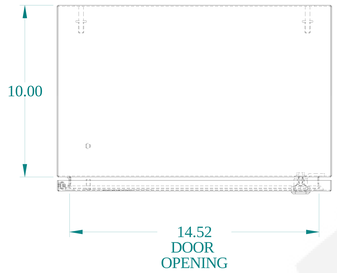

TOP VIEW

ISOMETRIC VIEWS

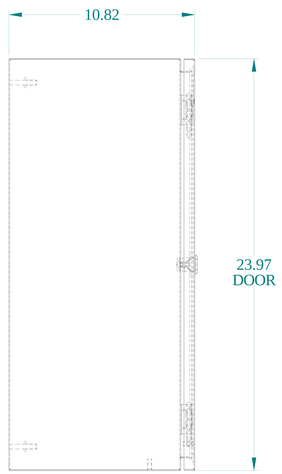

SIDE VIEW

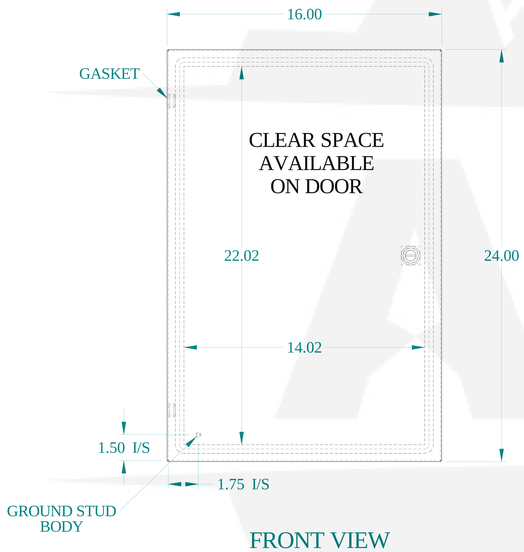

FRONT VIEW

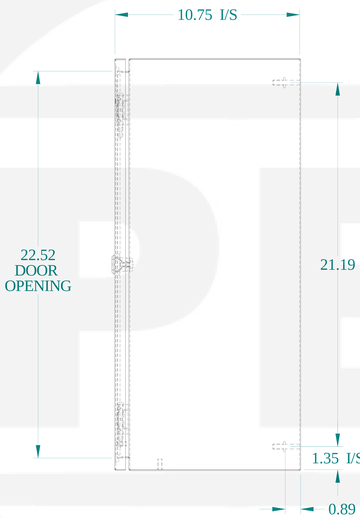

SIDE VIEW

BACK VIEW

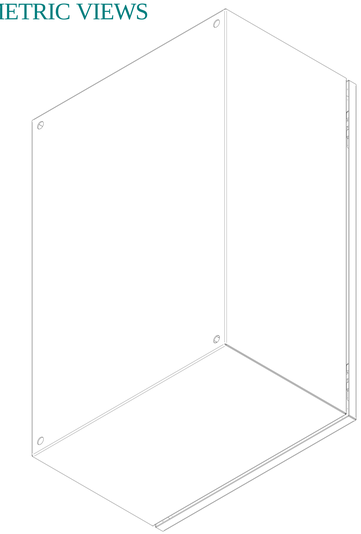

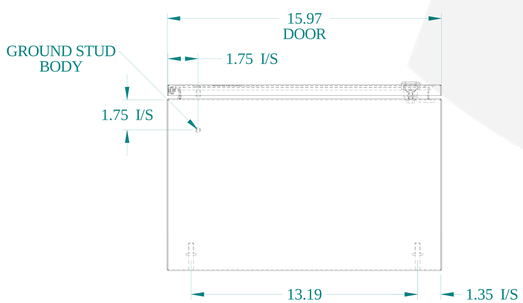

BOTTOM VIEW

HAMMOND MANUFACTURING®

www.hammondmfg.com

Data subject to change without notice.

Part # : EN4SD241610SS	Date : Mar. 23, 2019

Link:www.hammfg.com/EN4SD241610SS