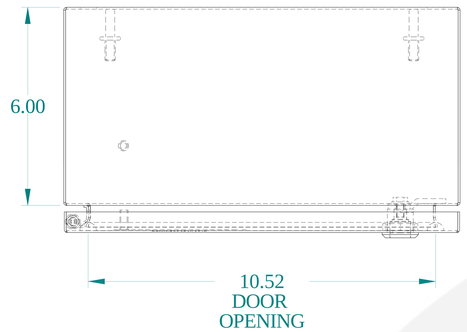

TOP VIEW

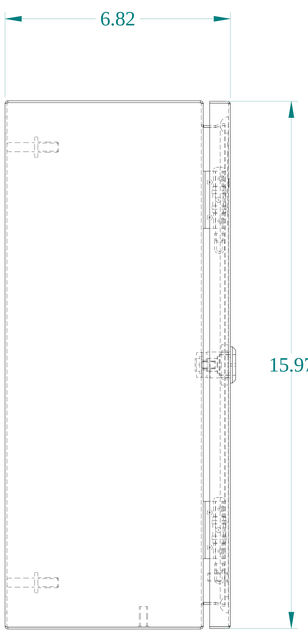

SIDE VIEW

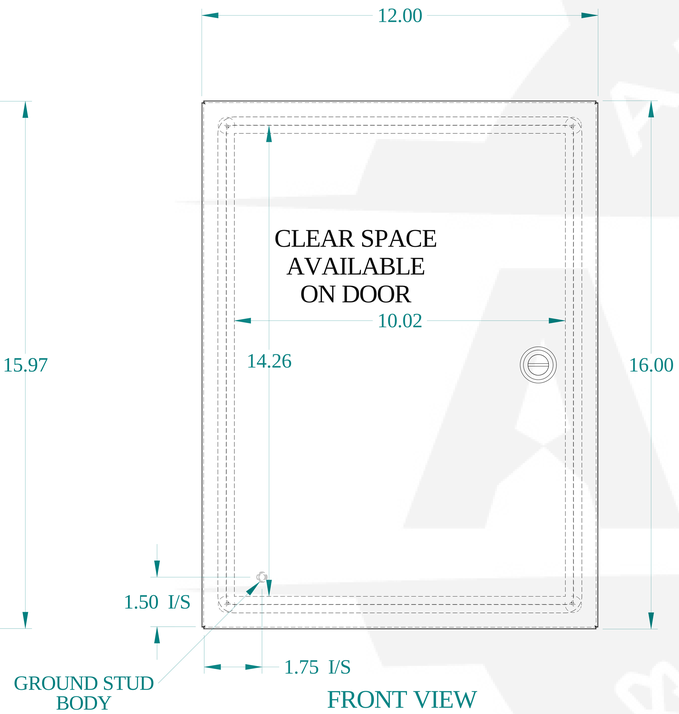

FRONT VIEW

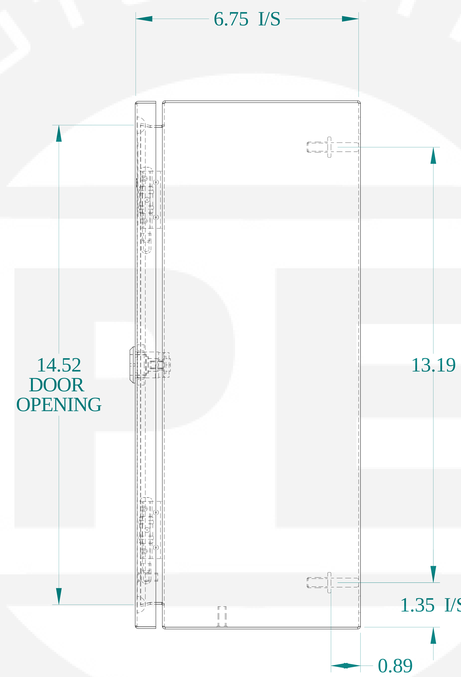

SIDE VIEW

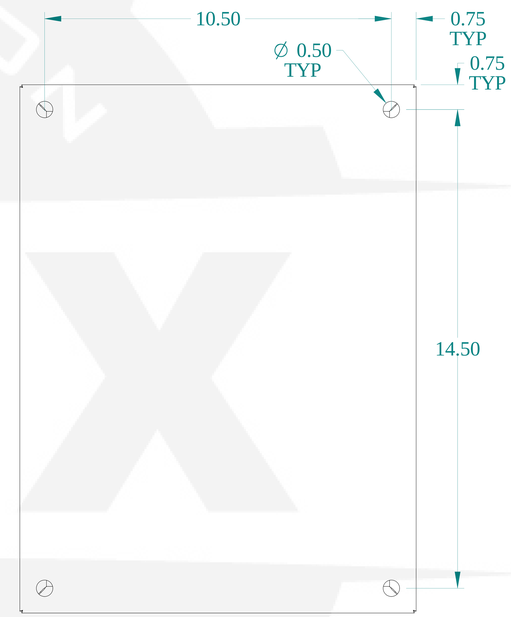

BACK VIEW

BOTTOM VIEW

ISOMETRIC VIEWS

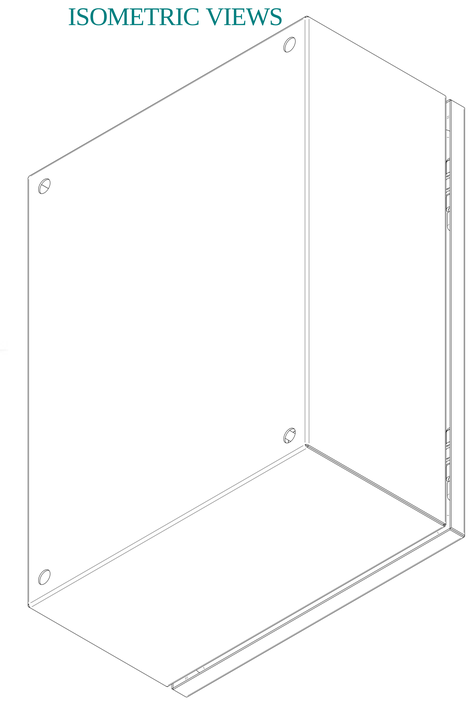

HAMMOND MANUFACTURING®

www.hammondmfg.com

Data subject to change without notice.

Part # : EN4SD16126SS	Date : Mar. 23, 2019

Link:www.hammfg.com/EN4SD16126SS