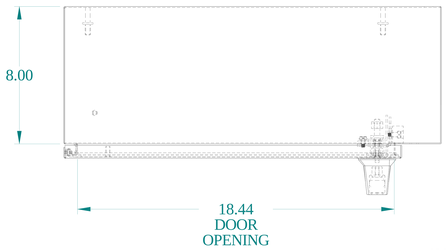

TOP VIEW

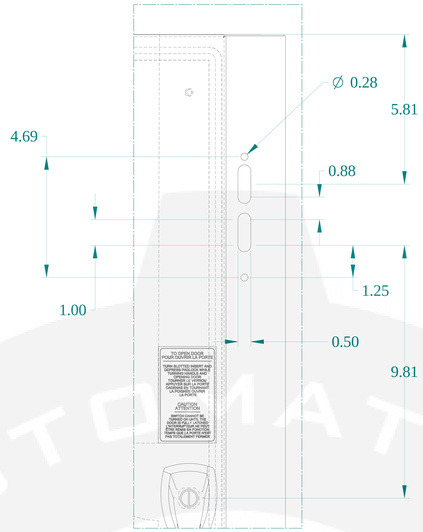

DETAIL Z

ISOMETRIC VIEWS

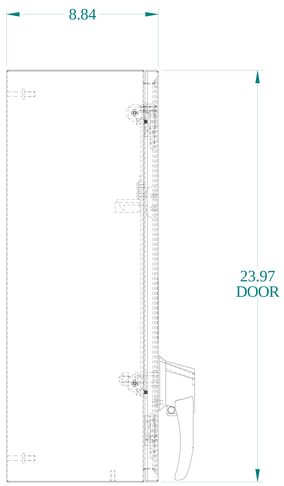

SIDE VIEW

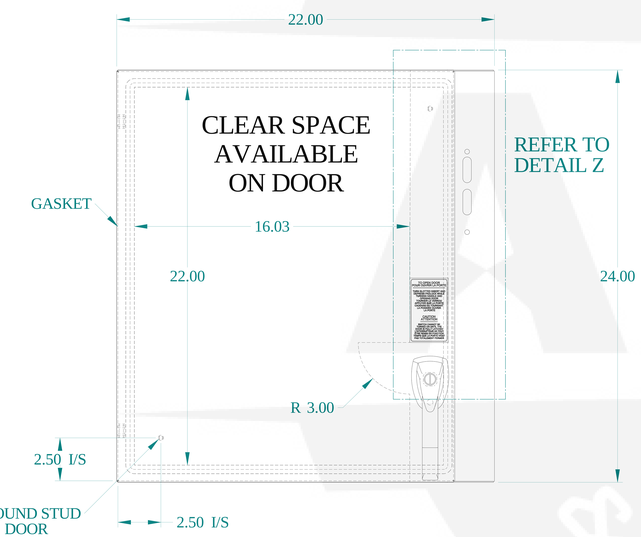

FRONT VIEW

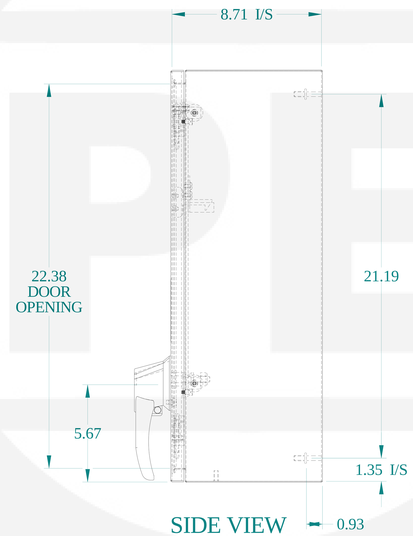

SIDE VIEW

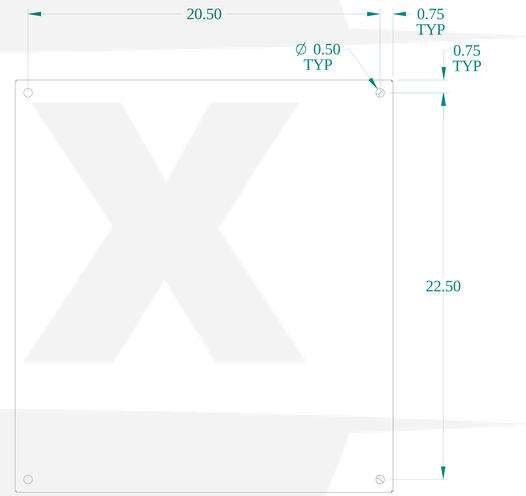

BACK VIEW

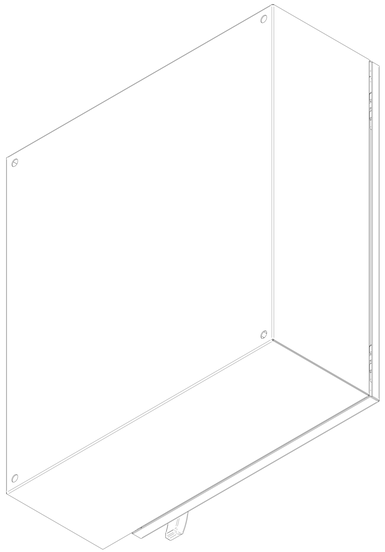

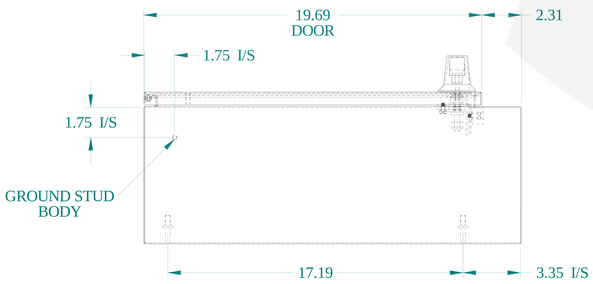

BOTTOM VIEW

HAMMOND MANUFACTURING®

www.hammondmfg.com

Data subject to change without notice.

Part # : EN4DSC24228SS	Date : Dec. 14, 2021

Link:www.hammfg.com/EN4DSC24228SS