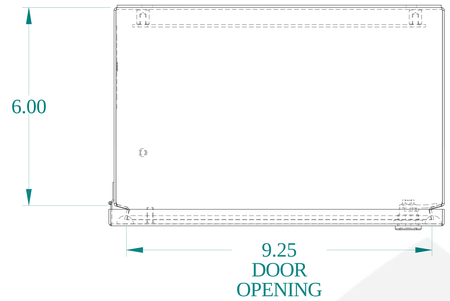


TOP VIEW

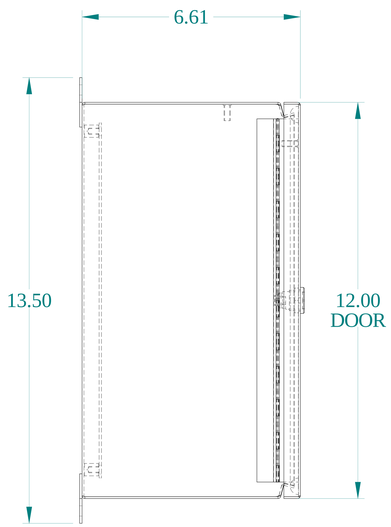


SIDE VIEW

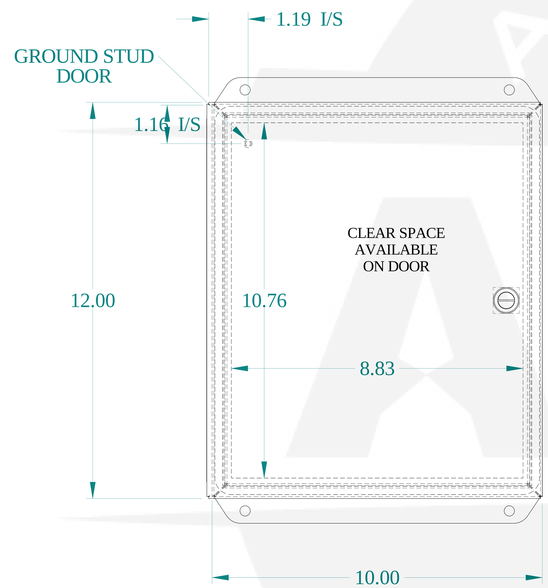


FRONT VIEW

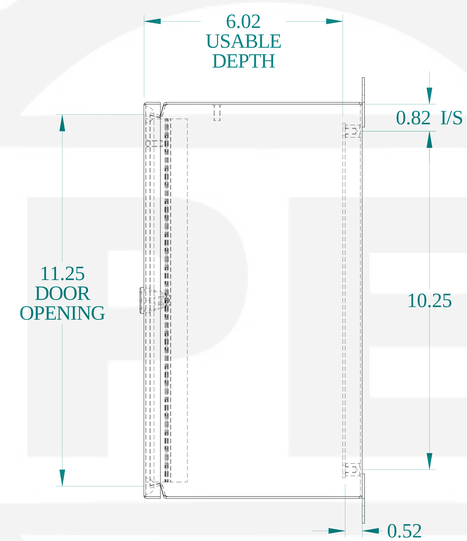


SIDE VIEW

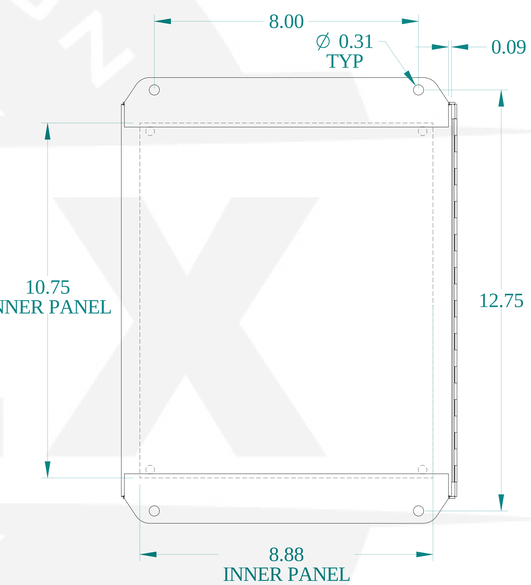


BACK VIEW

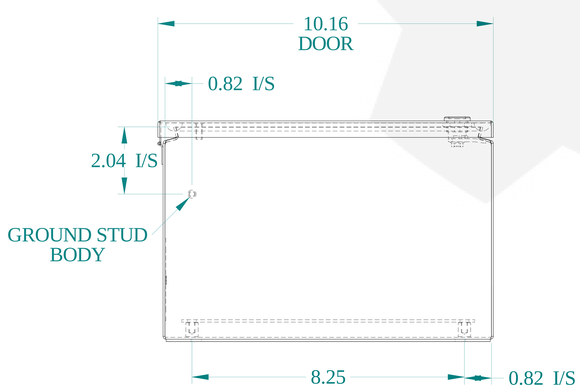


BOTTOM VIEW

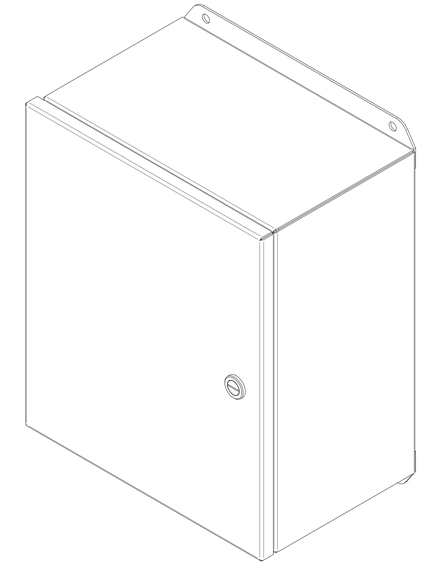

ISOMETRIC VIEWS

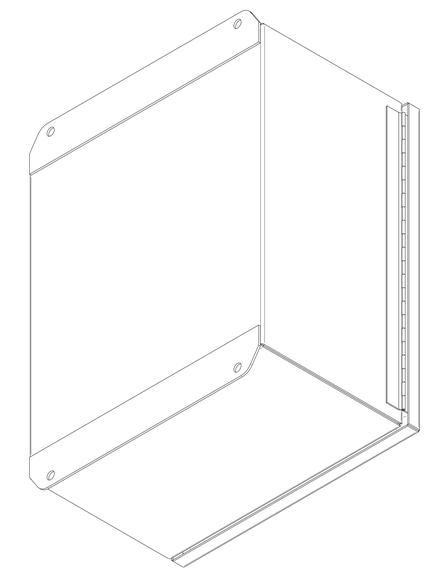

HAMMOND MANUFACTURING®

www.hammondmfg.com

Data subject to change without notice.

| | |
|---|---|
| Part # : EJ12106S16 | Date : Mar. 26, 2019 |

Link:www.hammfg.com/EJ12106S16