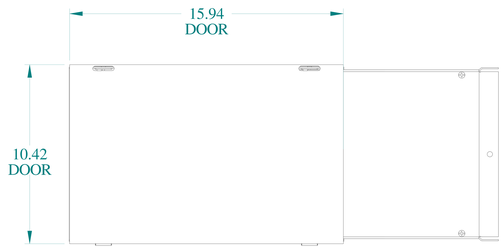


TOP VIEW

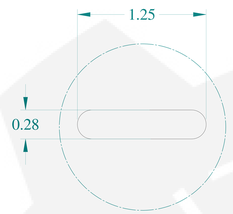


DETAIL Y
TYP

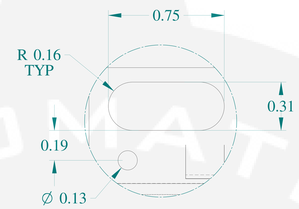


DETAIL Z
TYP

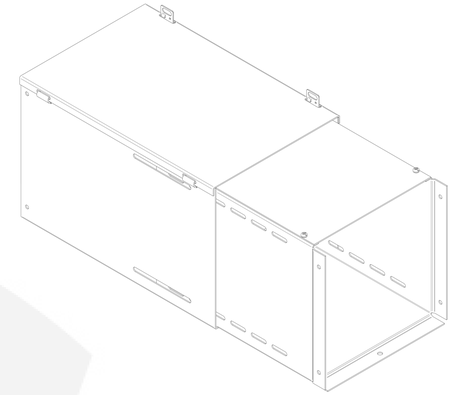

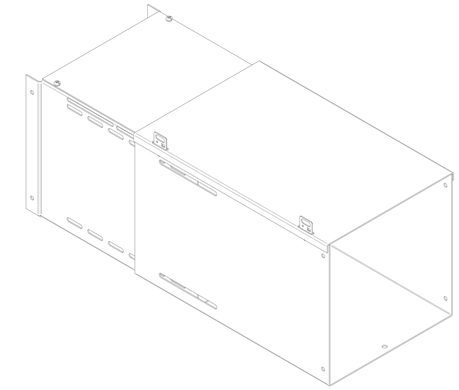

ISOMETRIC VIEWS

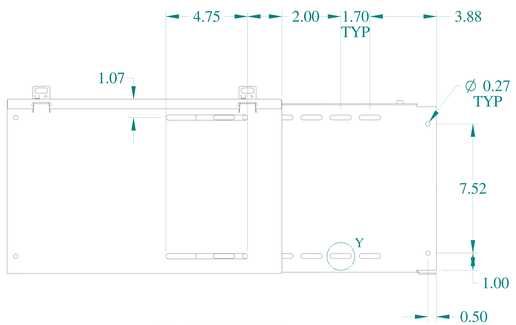


BACK VIEW

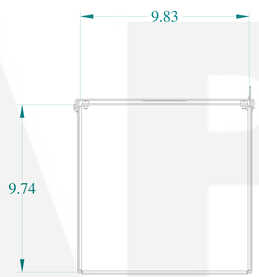


SIDE VIEW

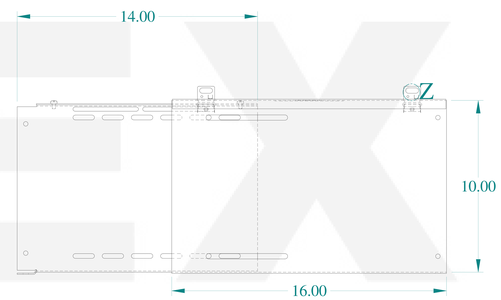


FRONT VIEW

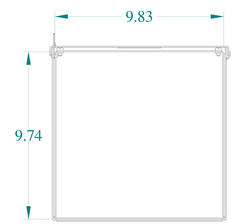


SIDE VIEW

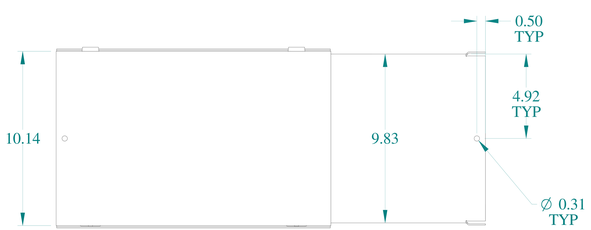


BOTTOM VIEW

HAMMOND MANUFACTURING®

www.hammondmfg.com

Data subject to change without notice.

| | |
|---|---|
| Part # : CWTL10 | Date : Mar. 24, 2019 |

Link:www.hammfg.com/CWTL10