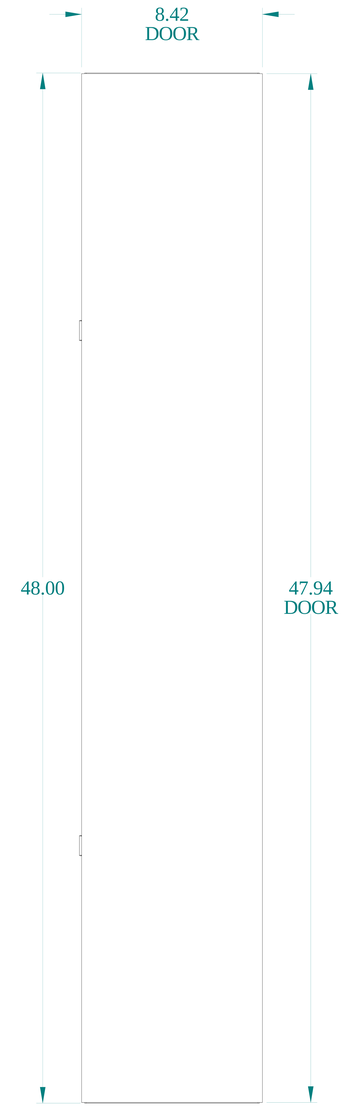

TOP VIEW

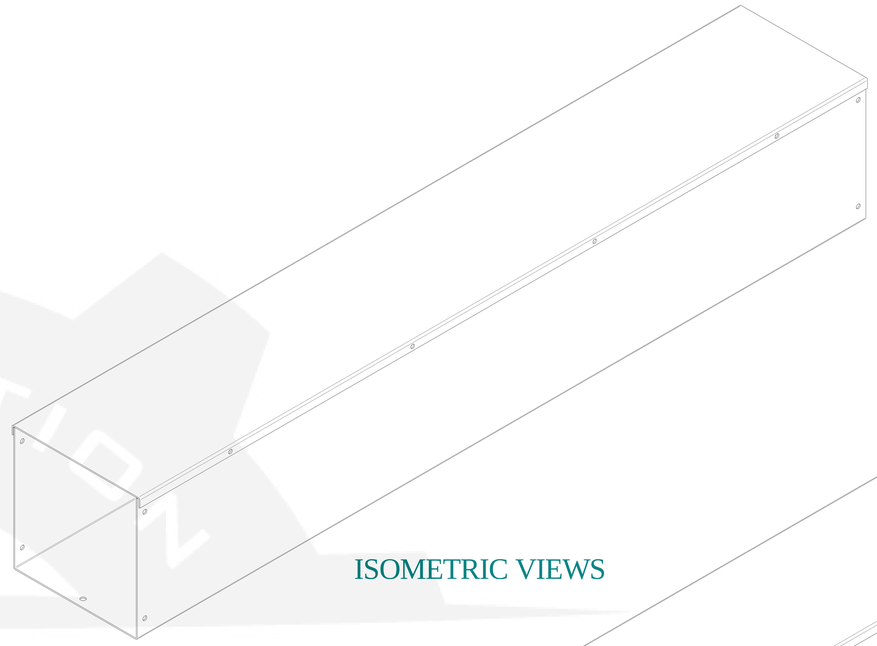

ISOMETRIC VIEWS

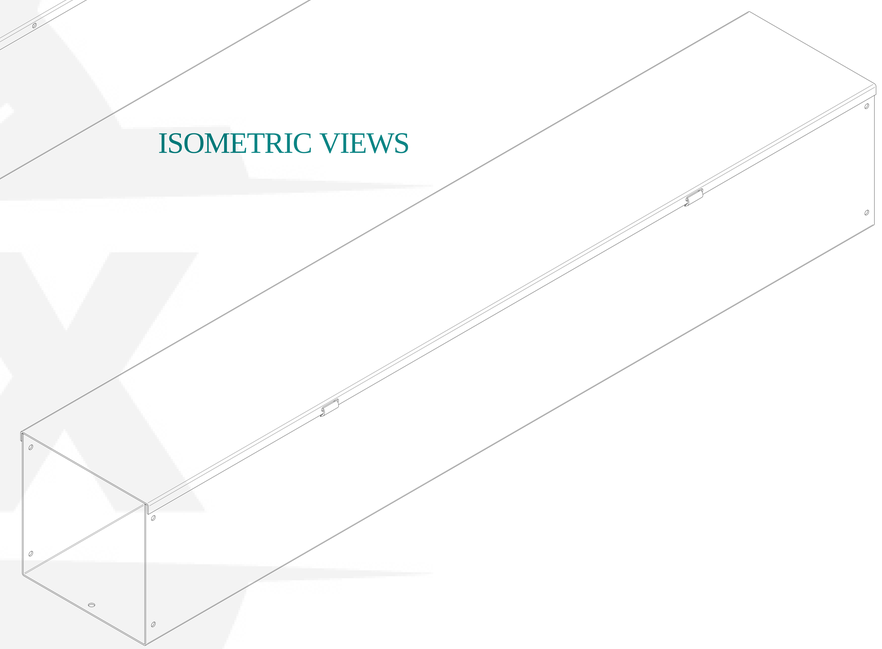

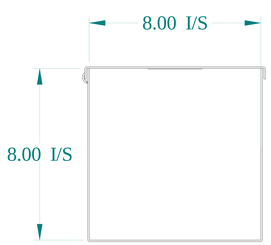

FRONT VIEW

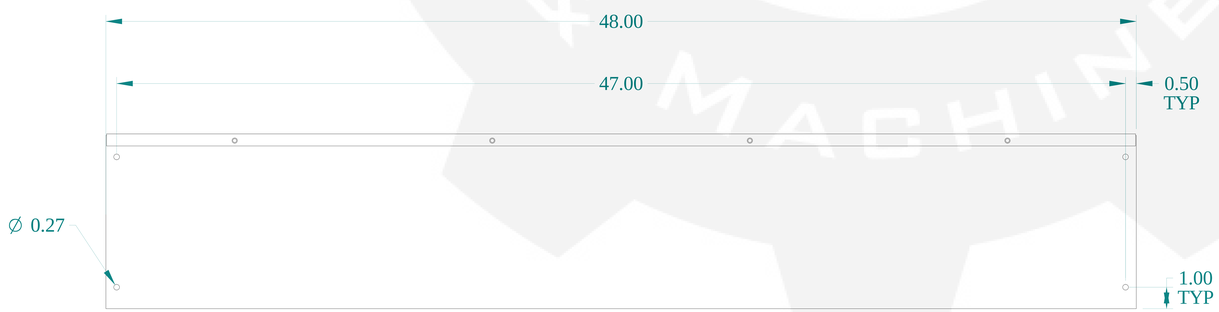

SIDE VIEW

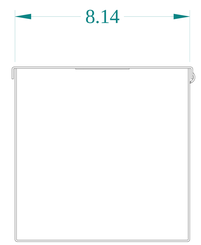

BACK VIEW

HAMMOND MANUFACTURING®

www.hammondmfg.com

Data subject to change without notice.

Part # : CWST848NK	Date : Mar. 24, 2019

Link:www.hammfg.com/CWST848NK