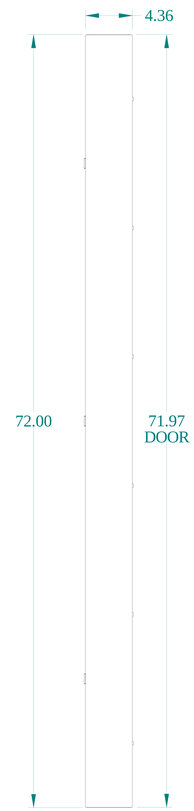


TOP VIEW

DETAIL Z
TYP

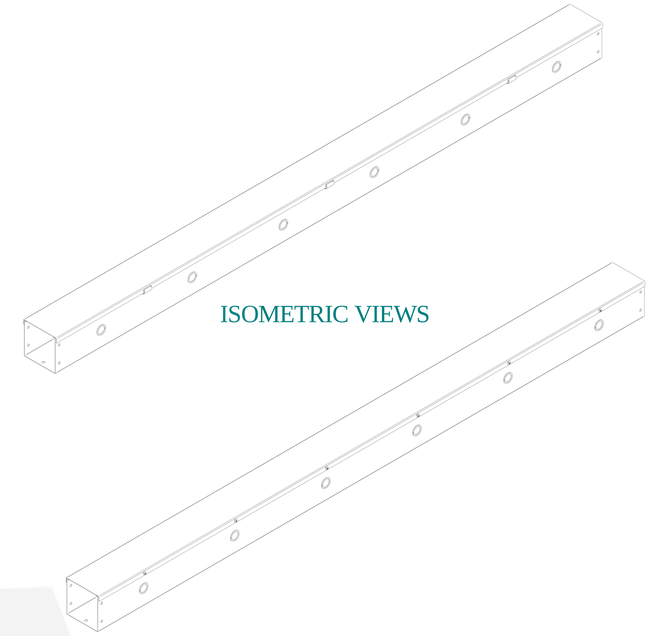

ISOMETRIC VIEWS

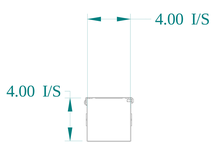


FRONT VIEW

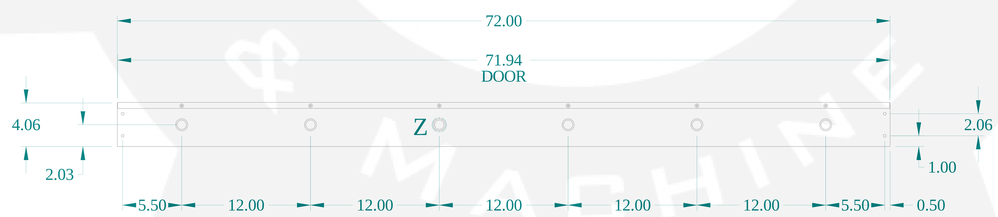


SIDE VIEW

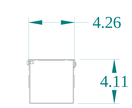


BACK VIEW

HAMMOND MANUFACTURING®

www.hammondmfg.com

Data subject to change without notice.

| | |
|---|---|
| Part # : CWST472 | Date : Mar. 24, 2019 |

Link:www.hammfg.com/CWST472