TOP VIEW

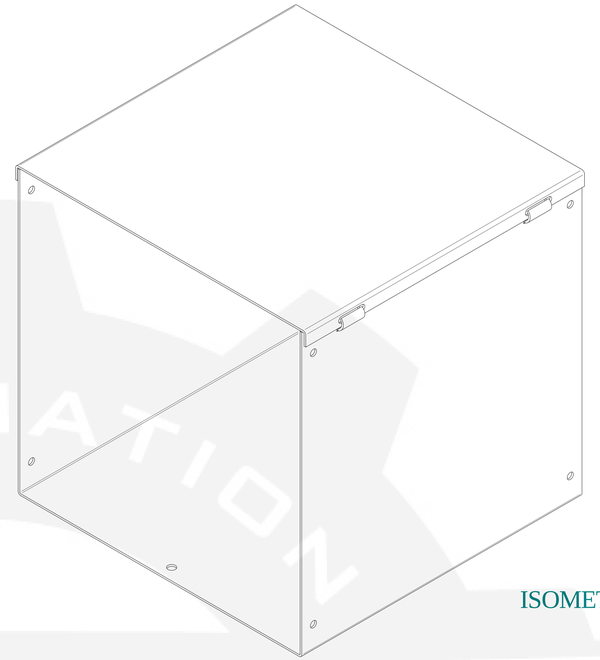

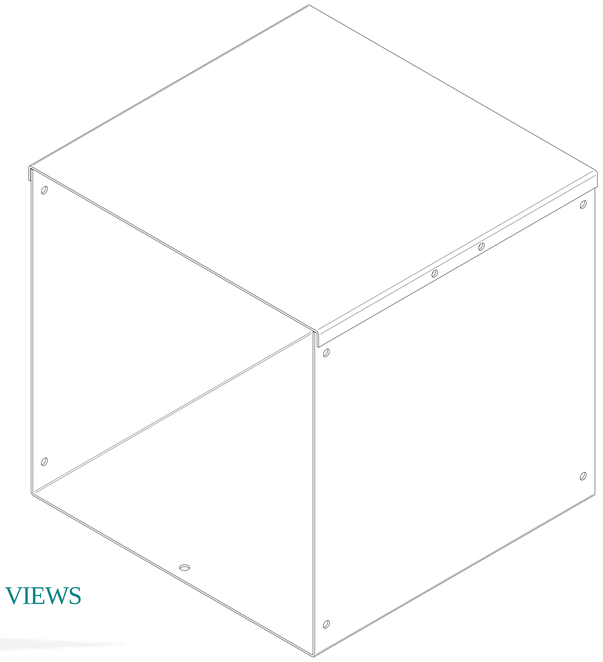

ISOMETRIC VIEWS

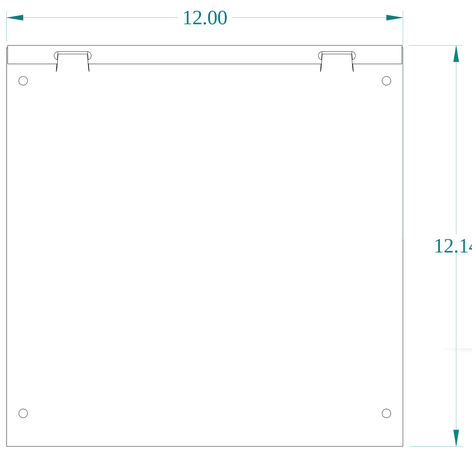

SIDE VIEW

FRONT VIEW

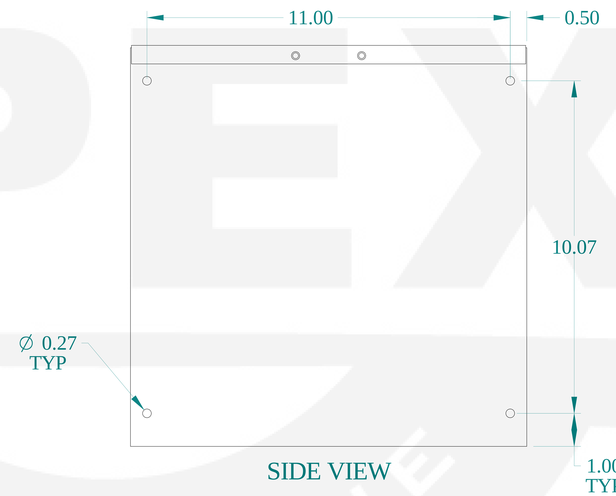

SIDE VIEW

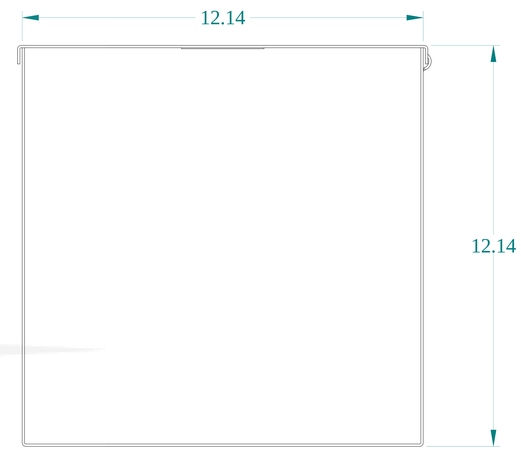

BACK VIEW

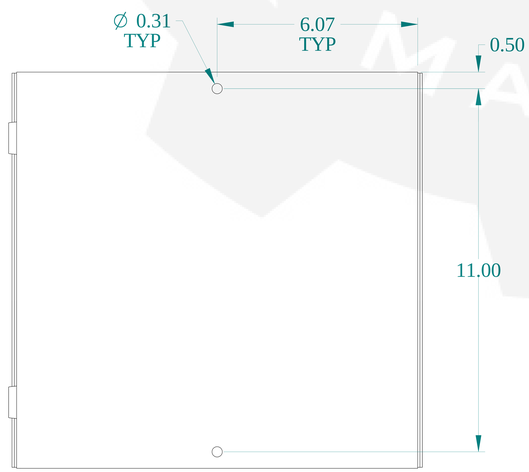

BOTTOM VIEW

HAMMOND MANUFACTURING®

www.hammondmfg.com

Data subject to change without notice.

Part # : CWST1212NK	Date : Mar. 24, 2019

Link:www.hammfg.com/CWST1212NK