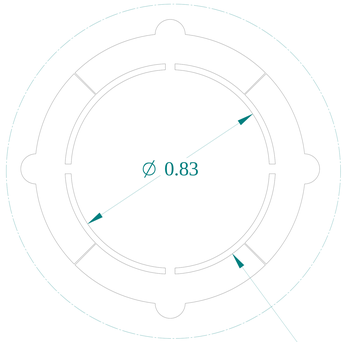


DETAIL Z
TYP

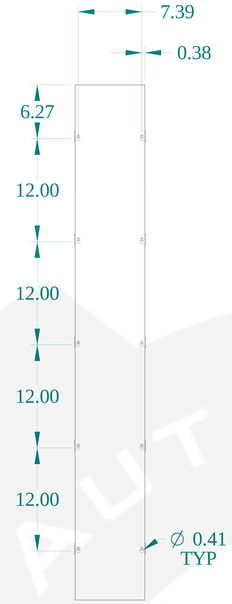


TOP VIEW

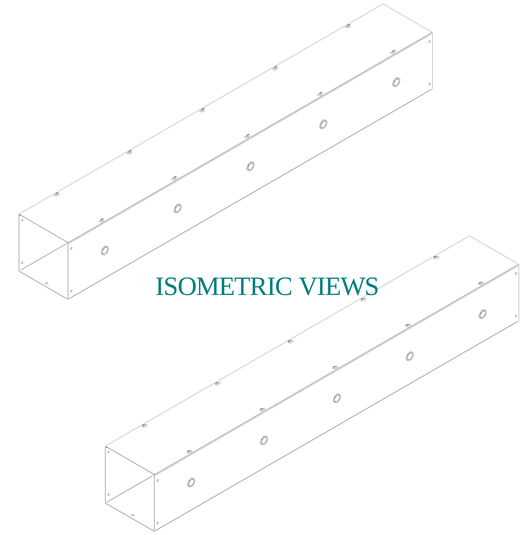

ISOMETRIC VIEWS

SIDE VIEW

FRONT VIEW

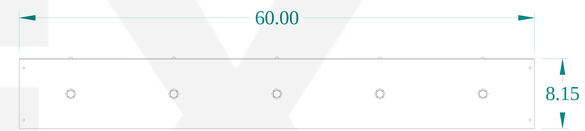


SIDE VIEW

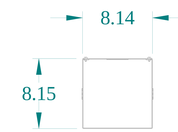


BACK VIEW

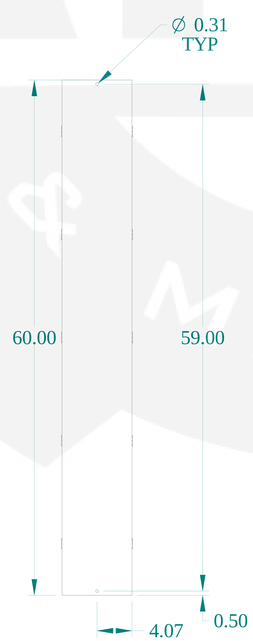


BOTTOM VIEW

HAMMOND MANUFACTURING®

www.hammondmfg.com

Data subject to change without notice.

| | |
|---|---|
| Part # : CWSC860 | Date : Mar. 22, 2019 |

Link:www.hammfg.com/CWSC860