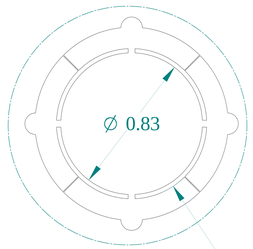

DETAIL Z
TYP

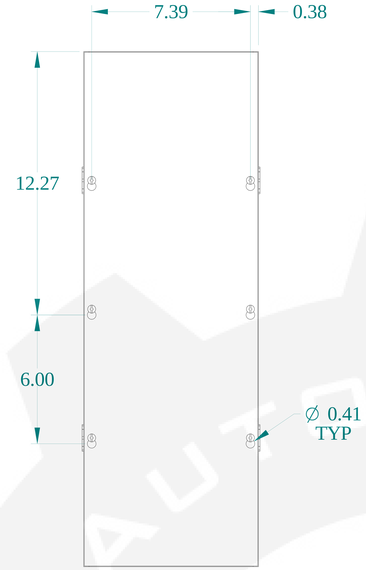

TOP VIEW

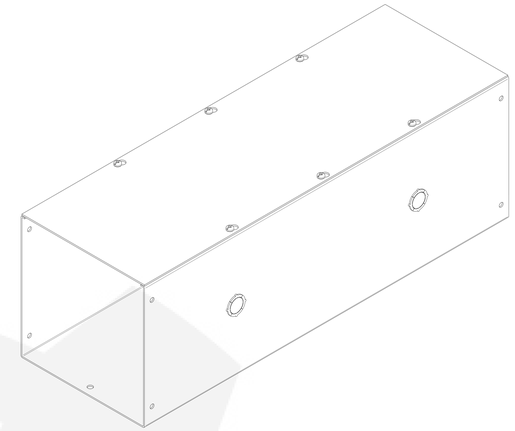

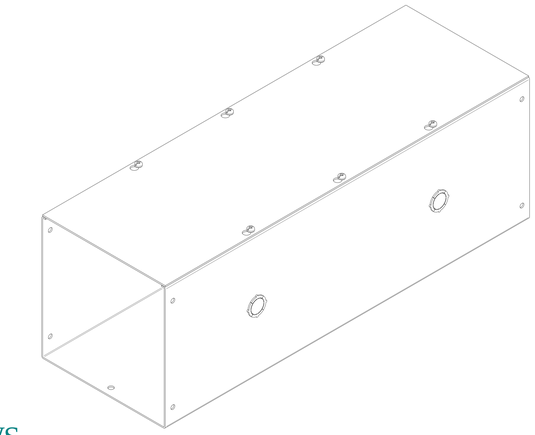

ISOMETRIC VIEWS

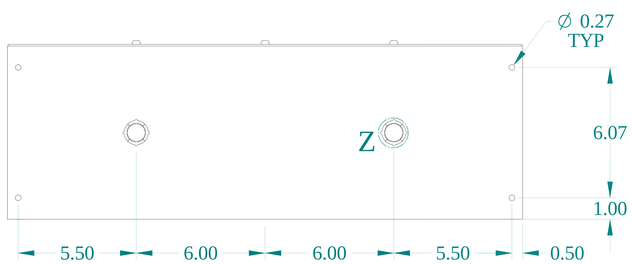

SIDE VIEW

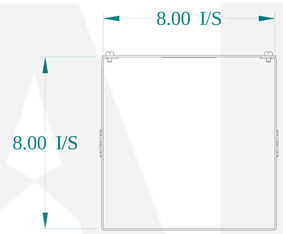

FRONT VIEW

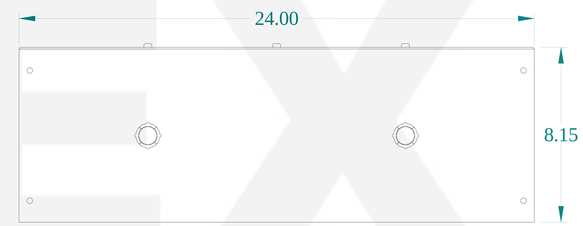

SIDE VIEW

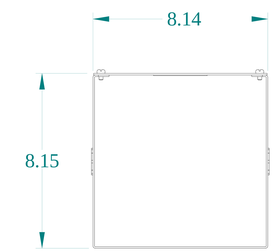

BACK VIEW

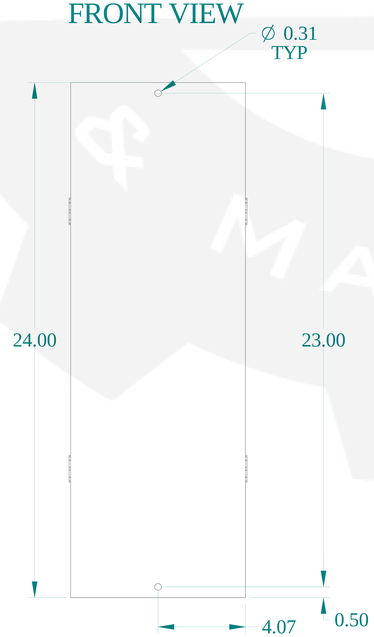

BOTTOM VIEW

HAMMOND MANUFACTURING®

www.hammondmfg.com

Data subject to change without notice.

Part # : CWSC824	Date : Mar. 22, 2019

Link:www.hammfg.com/CWSC824