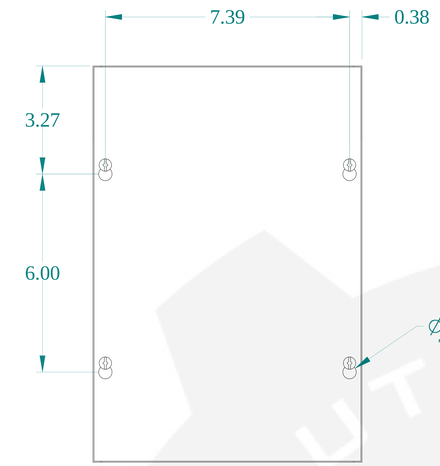


TOP VIEW

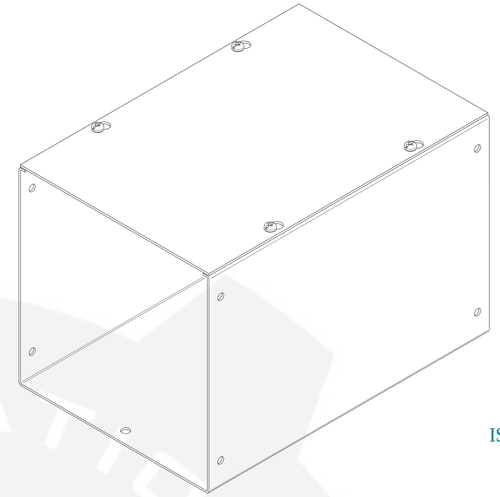

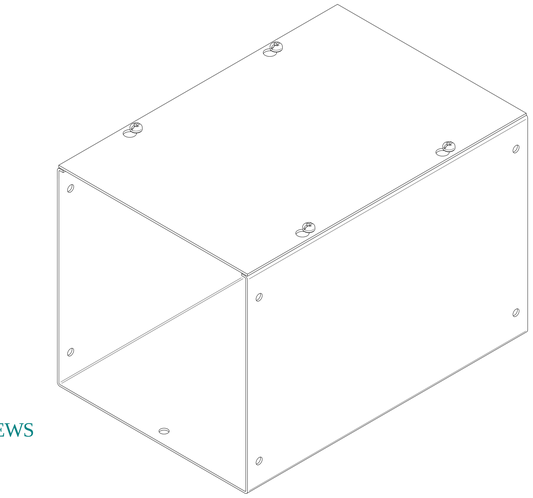

ISOMETRIC VIEWS

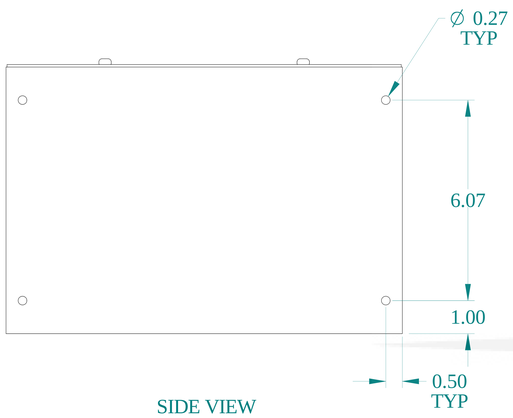


SIDE VIEW

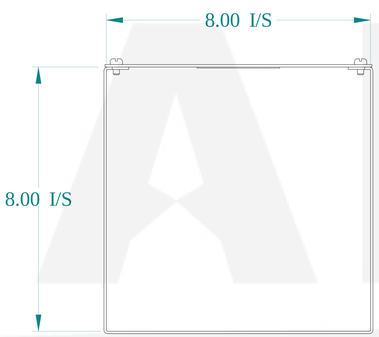


FRONT VIEW

SIDE VIEW

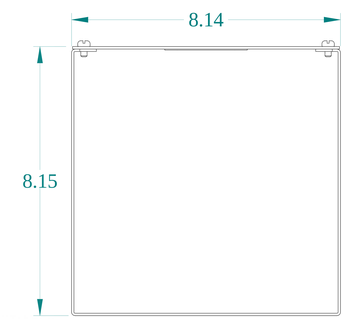


BACK VIEW

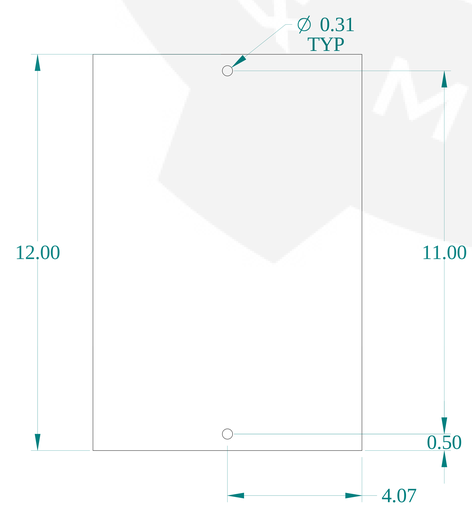


BOTTOM VIEW

HAMMOND MANUFACTURING®

www.hammondmfg.com

Data subject to change without notice.

| | |
|---|---|
| Part # : CWSC812GNK | Date : Jan. 15, 2020 |

Link:www.hammfg.com/CWSC812GNK