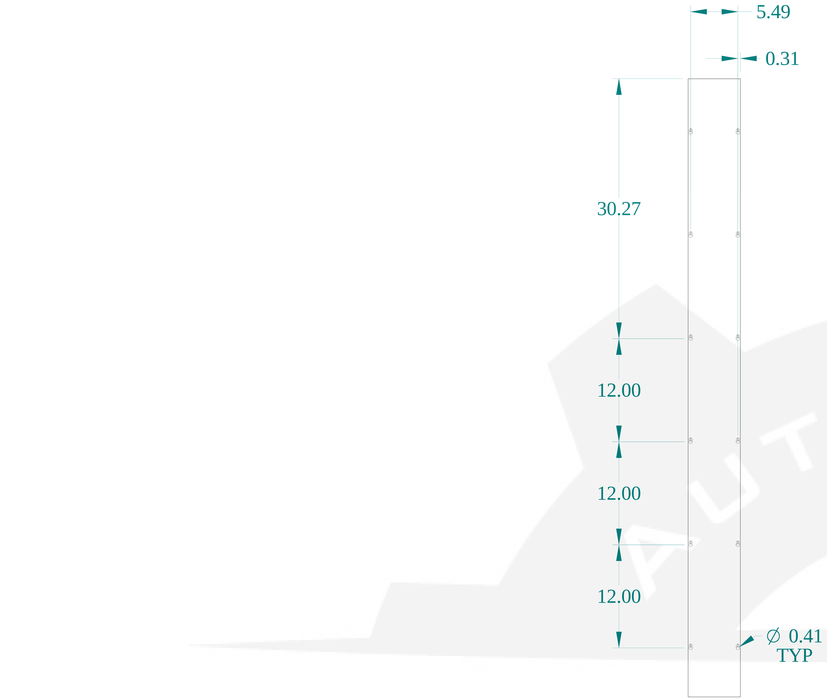

TOP VIEW

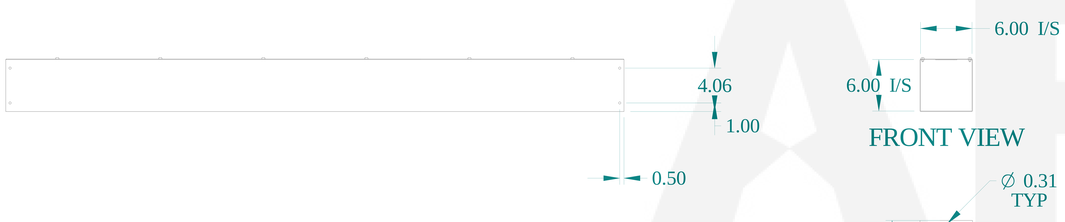

FRONT VIEW

SIDE VIEW

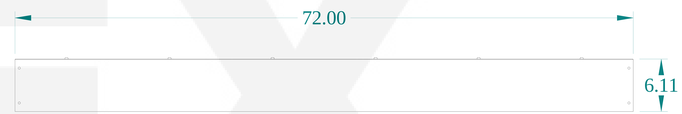

SIDE VIEW

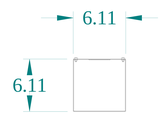

BACK VIEW

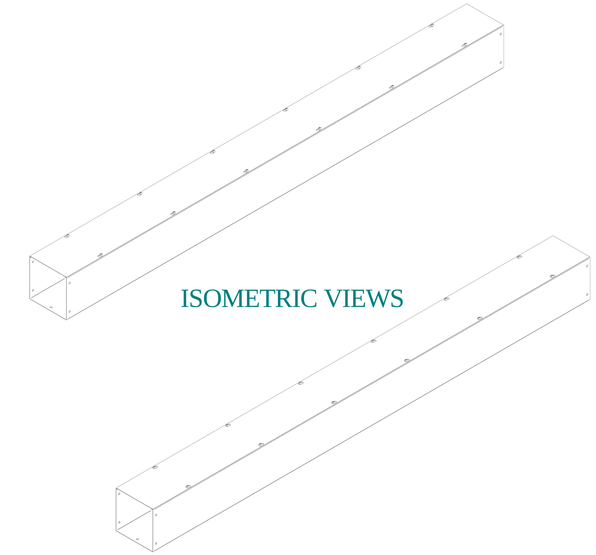

ISOMETRIC VIEWS

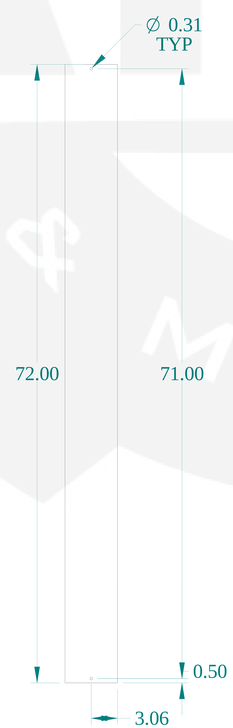

BOTTOM VIEW

HAMMOND MANUFACTURING®

www.hammondmfg.com

Data subject to change without notice.

Part # : CWSC672NK	Date : Mar. 24, 2019

Link:www.hammfg.com/CWSC672NK