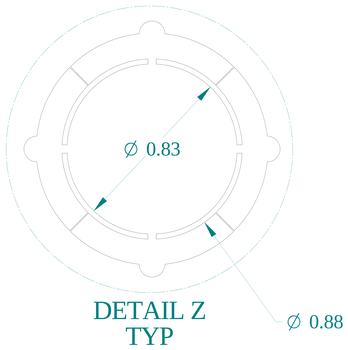

DETAIL Z
TYP

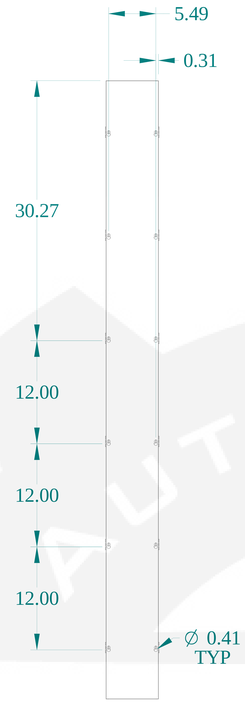

TOP VIEW

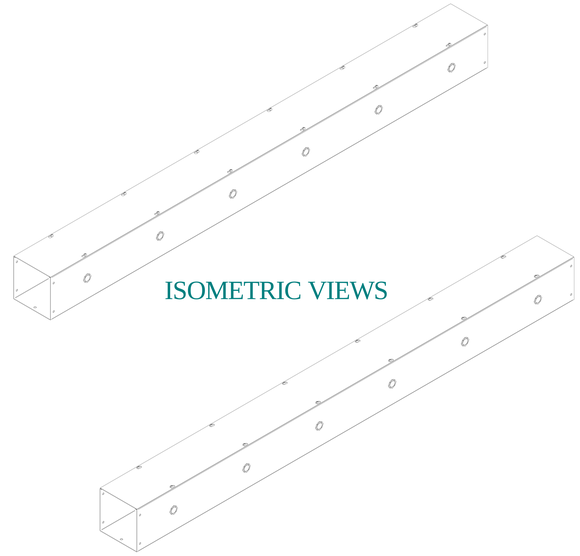

ISOMETRIC VIEWS

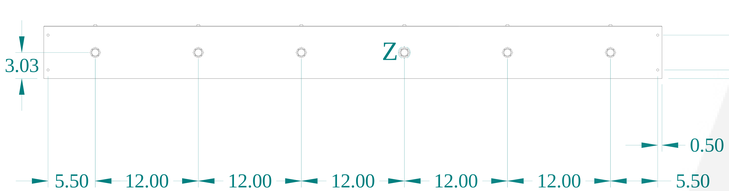

SIDE VIEW

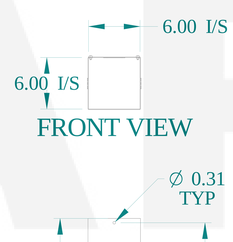

FRONT VIEW

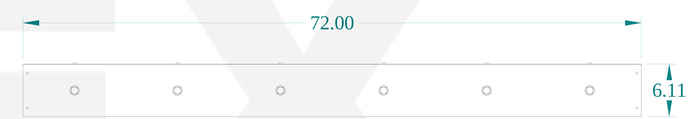

SIDE VIEW

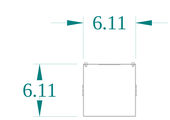

BACK VIEW

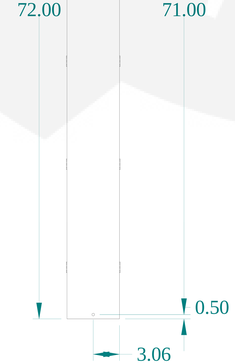

BOTTOM VIEW

HAMMOND MANUFACTURING®

www.hammondmfg.com

Data subject to change without notice.

Part # : CWSC672G	Date : Jan. 31, 2020

Link:www.hammfg.com/CWSC672G