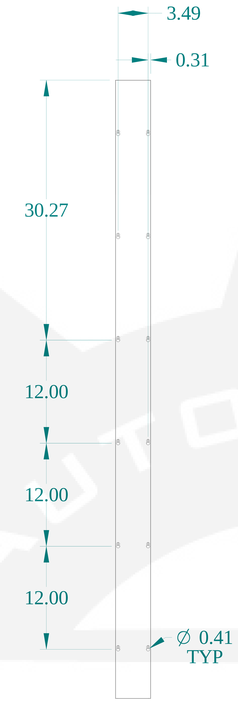

TOP VIEW

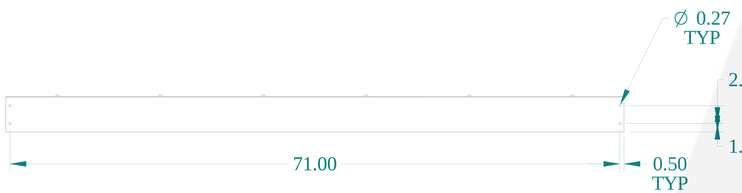

SIDE VIEW

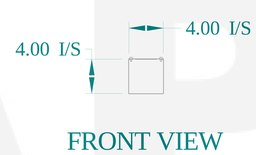

FRONT VIEW

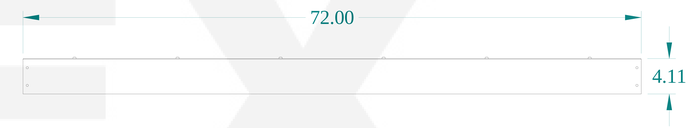

SIDE VIEW

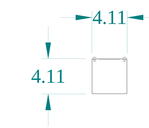

BACK VIEW

BOTTOM VIEW

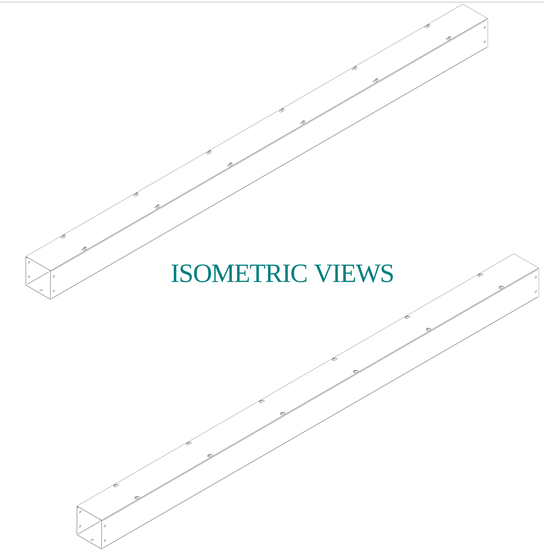

ISOMETRIC VIEWS

HAMMOND MANUFACTURING®

www.hammondmfg.com

Data subject to change without notice.

Part # : CWSC472GNK	Date : Jan. 15, 2020

Link:www.hammfg.com/CWSC472GNK