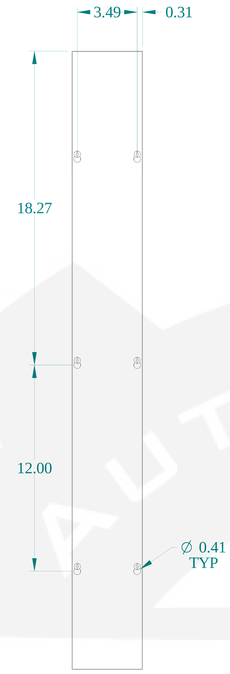

TOP VIEW

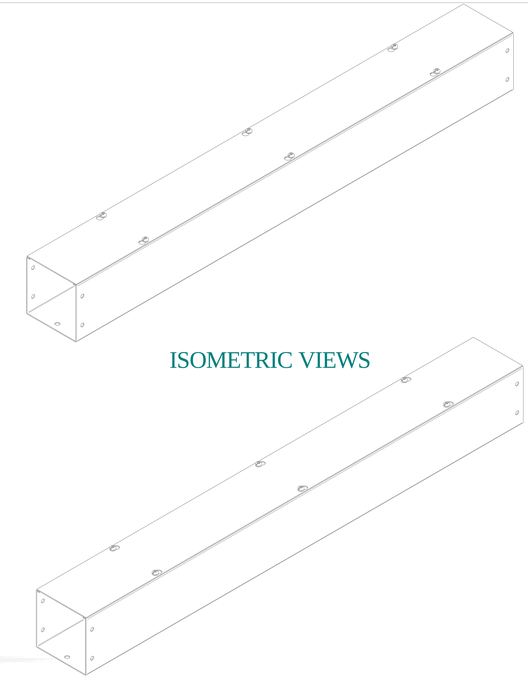

ISOMETRIC VIEWS

SIDE VIEW

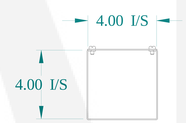

FRONT VIEW

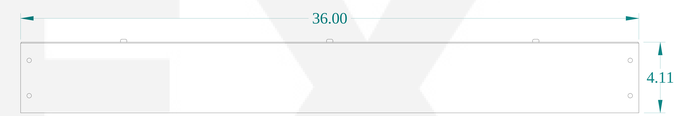

SIDE VIEW

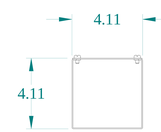

BACK VIEW

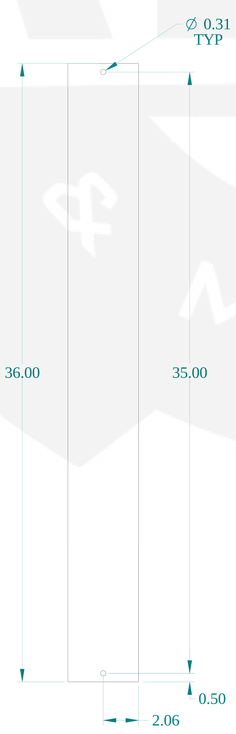

BOTTOM VIEW

HAMMOND MANUFACTURING®

www.hammondmfg.com

Data subject to change without notice.

Part # : CWSC436GNK	Date : Jan. 15, 2020

Link:www.hammfg.com/CWSC436GNK

APEX AUTOMATION & MACHINE