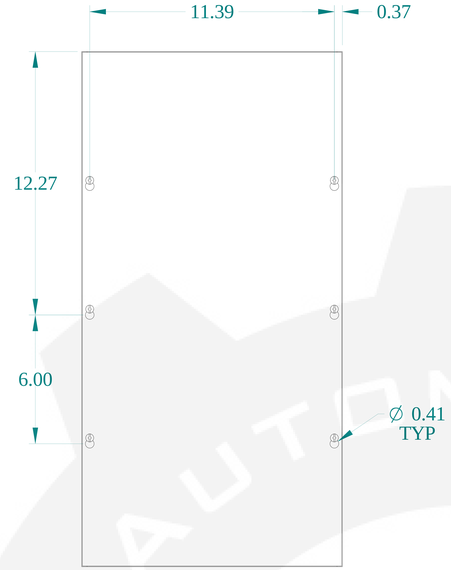

TOP VIEW

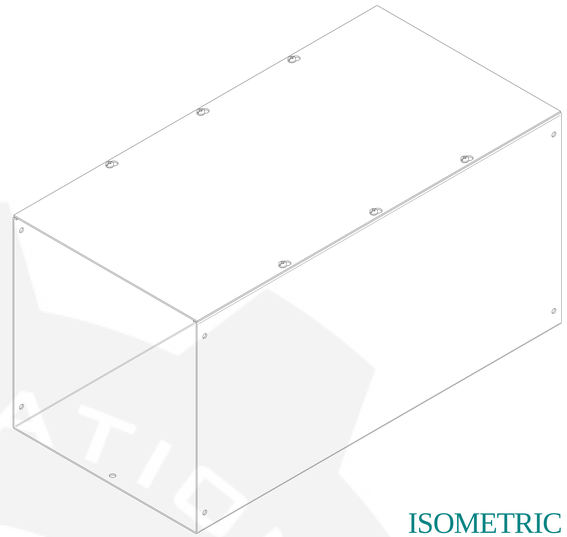

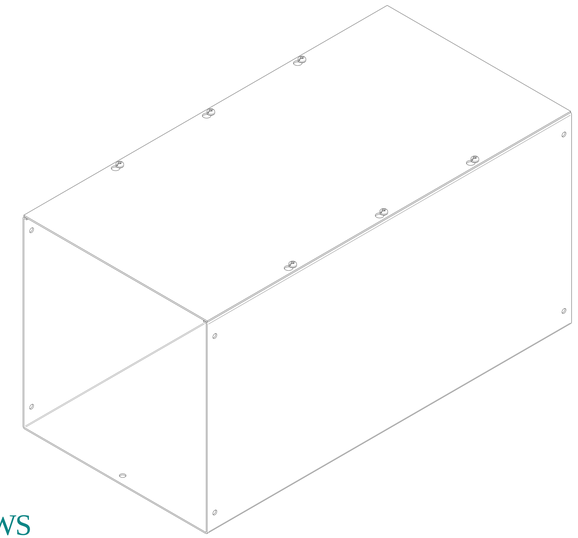

ISOMETRIC VIEWS

SIDE VIEW

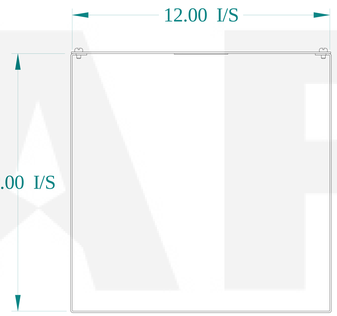

FRONT VIEW

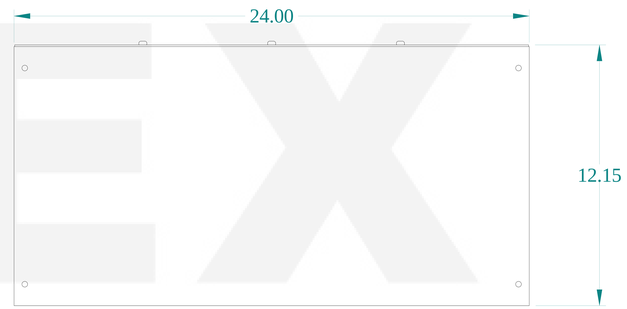

SIDE VIEW

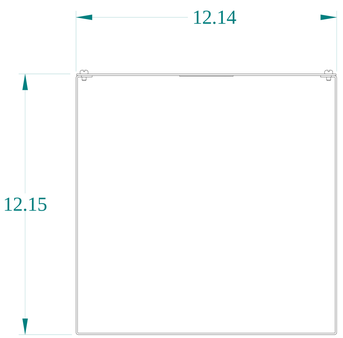

BACK VIEW

BOTTOM VIEW

HAMMOND MANUFACTURING®

www.hammondmfg.com

Data subject to change without notice.

Part # : CWSC1224NK	Date : Mar. 22, 2019

Link:www.hammfg.com/CWSC1224NK