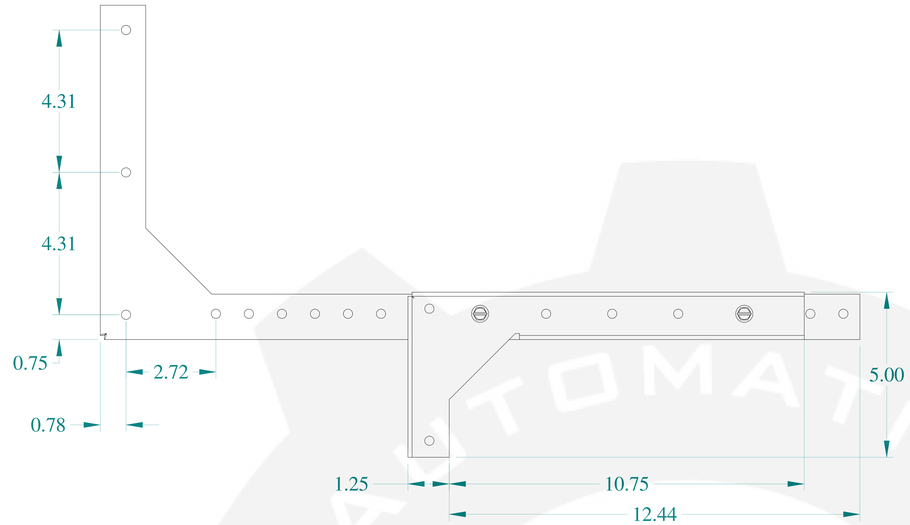


BACK VIEW

TOP VIEW

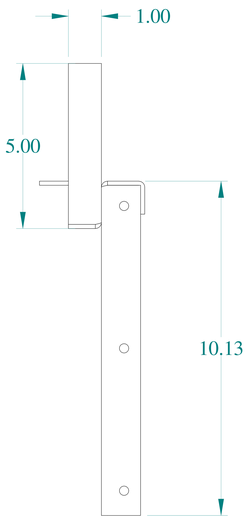


SIDE VIEW

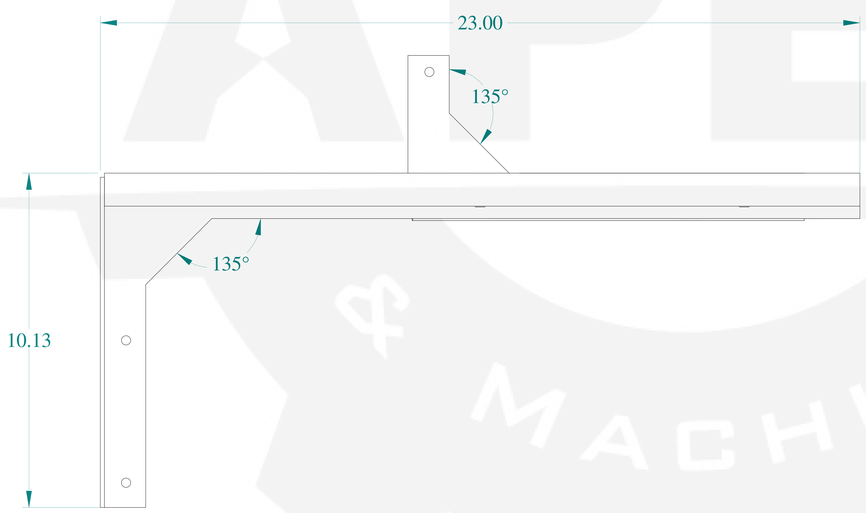


FRONT VIEW

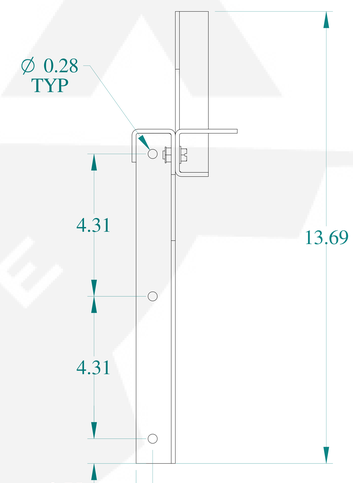


SIDE VIEW

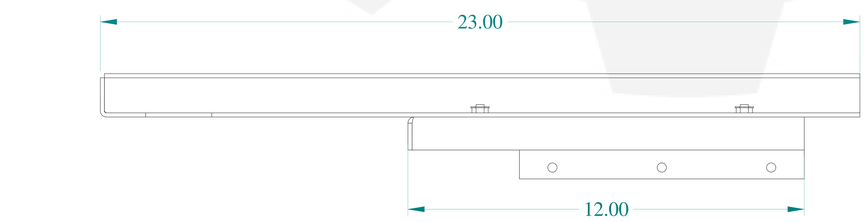


BOTTOM VIEW

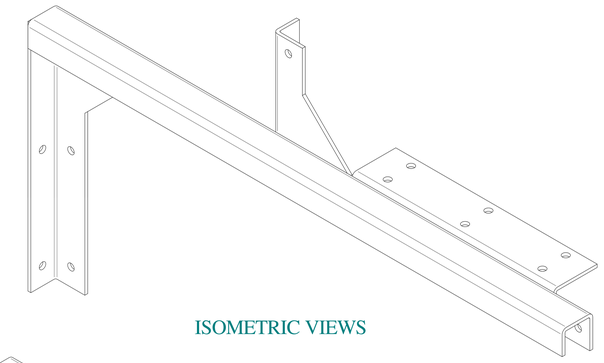

ISOMETRIC VIEWS

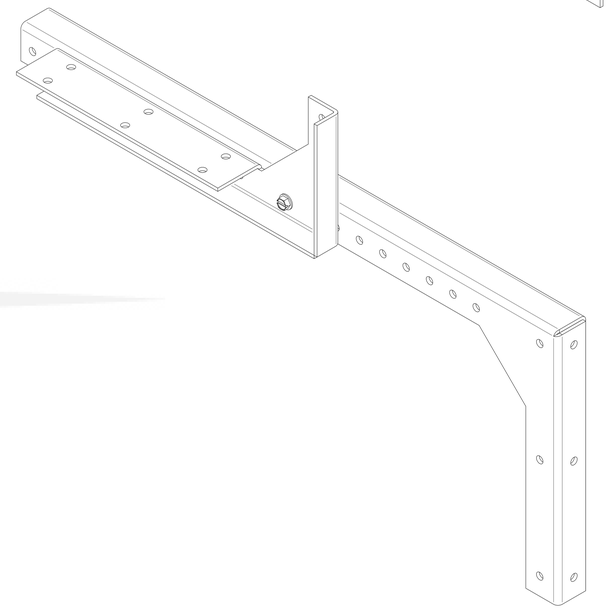

HAMMOND MANUFACTURING®

www.hammondmfg.com

Data subject to change without notice.

| | |
|---|---|
| Part # : CWHW8G | Date : Jan. 30, 2020 |

Link:www.hammfg.com/CWHW8G