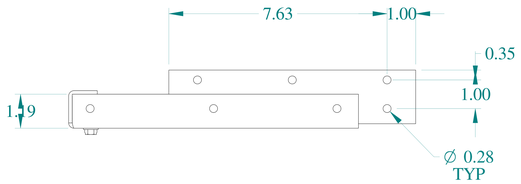

TOP VIEW

SIDE VIEW

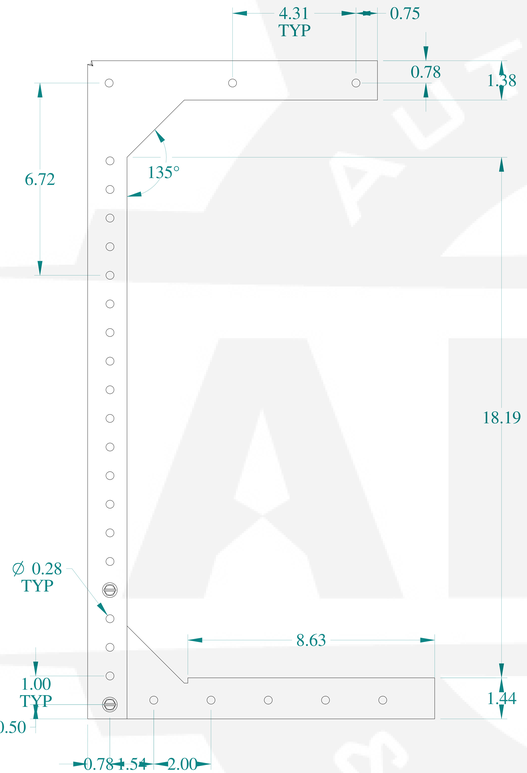

FRONT VIEW

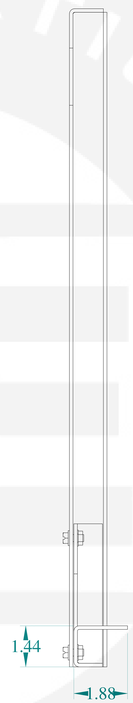

SIDE VIEW

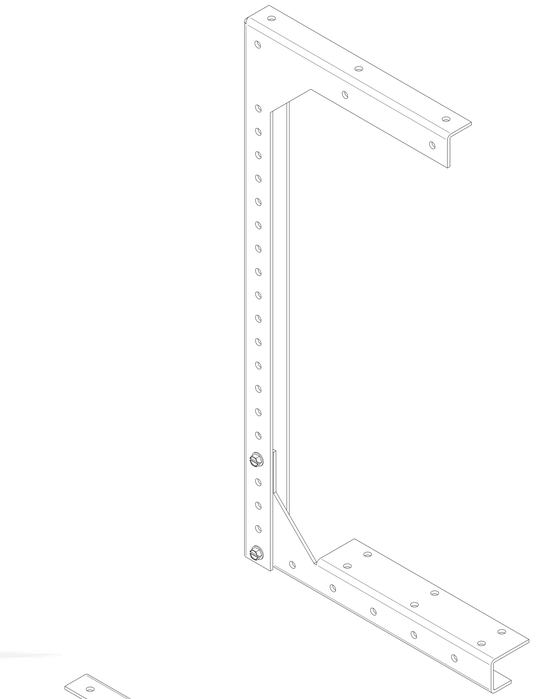

ISOMETRIC VIEWS

BOTTOM VIEW

HAMMOND MANUFACTURING®

www.hammondmfg.com

Data subject to change without notice.

Part # : CWHD8	Date : Mar. 22, 2019

Link:www.hammfg.com/CWHD8