TOP VIEW

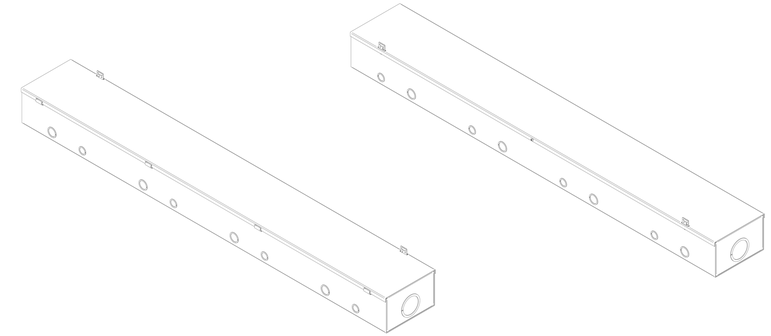

ISOMETRIC VIEWS

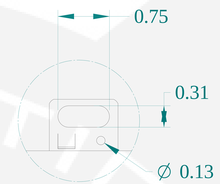

DETAIL Z
TYP

SECTION V-V

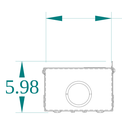

SIDE VIEW

FRONT VIEW

SIDE VIEW

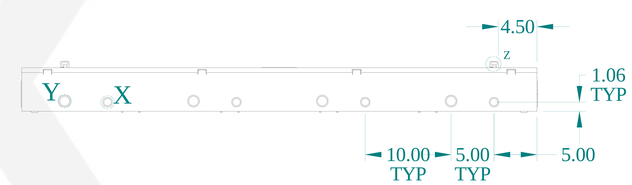

BACK VIEW

BOTTOM VIEW

DETAIL W
TYP

DETAIL Y
TYP

DETAIL X
TYP

HAMMOND MANUFACTURING®

www.hammondmfg.com

Data subject to change without notice.

Part # : CST5204	Date : Nov. 4, 2020

Link:www.hammfg.com/CST5204