TOP VIEW

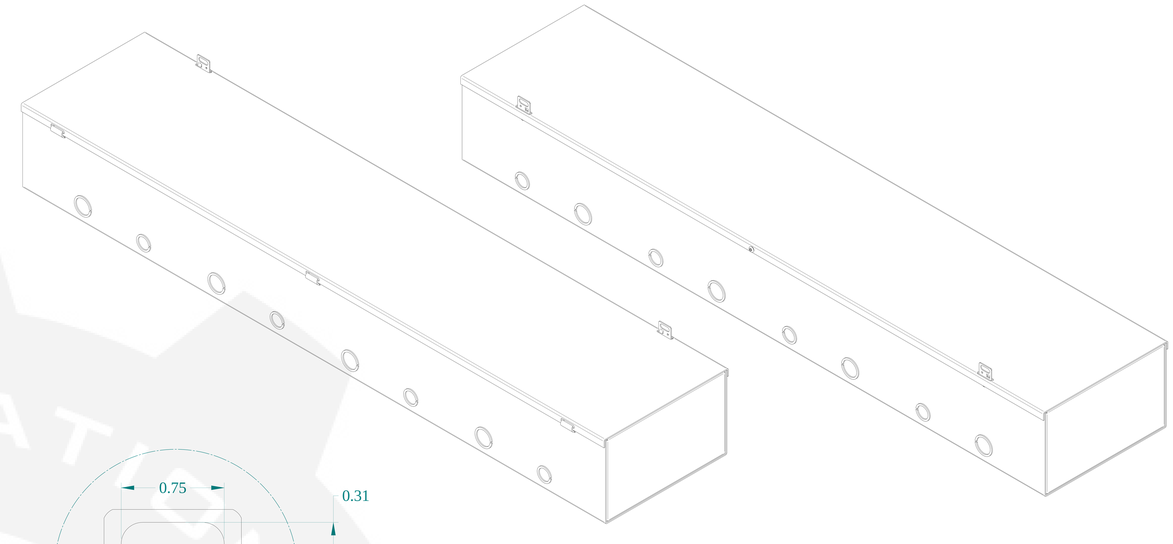

ISOMETRIC VIEWS

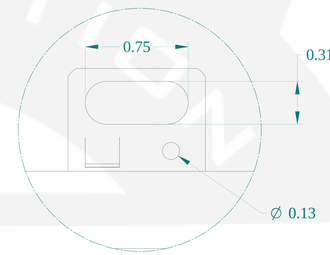

DETAIL Z
TYP

SIDE VIEW

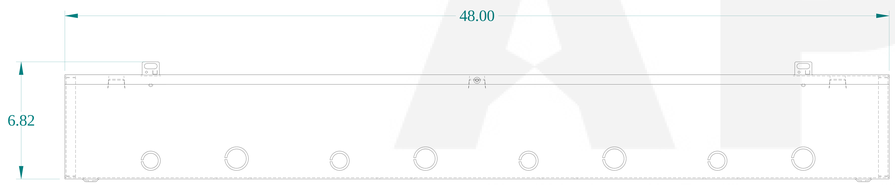

FRONT VIEW

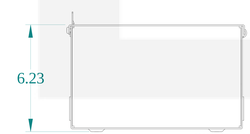

SIDE VIEW

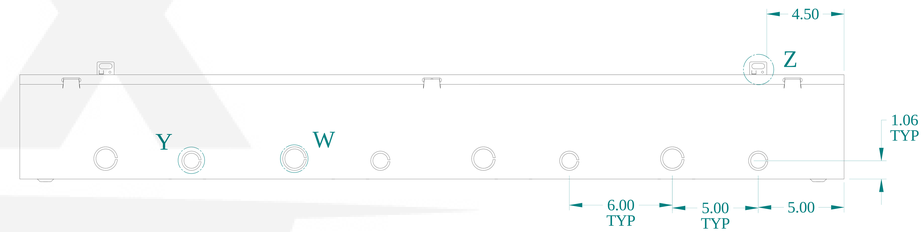

BACK VIEW

DETAIL Y
TYP

DETAIL W
TYP

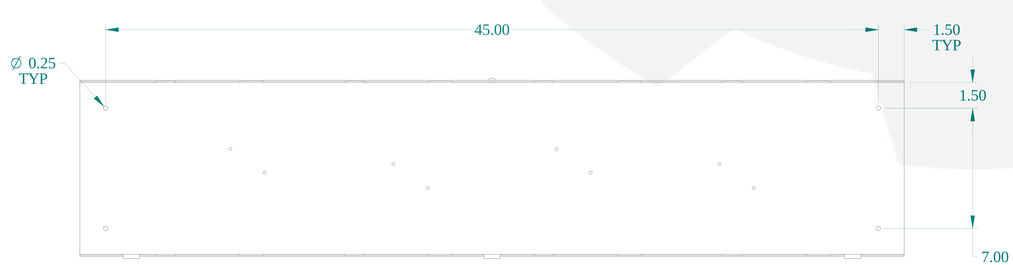

BOTTOM VIEW

HAMMOND MANUFACTURING®

www.hammondmfg.com

Data subject to change without notice.

Part # : CST4400	Date : Mar. 24, 2019

Link:www.hammfg.com/CST4400