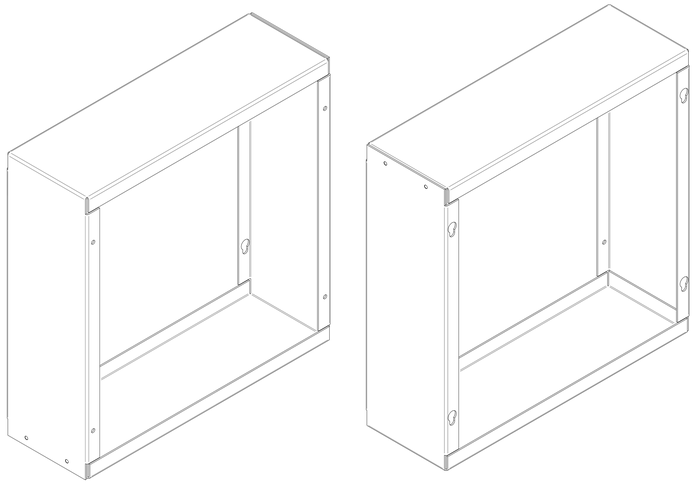

ISOMETRIC VIEWS

TOP VIEW

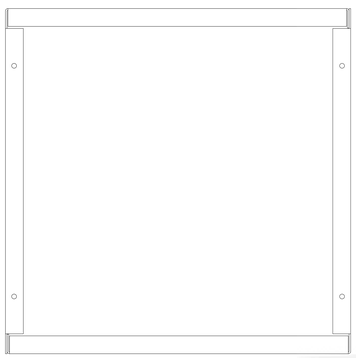

BACK VIEW

SIDE VIEW

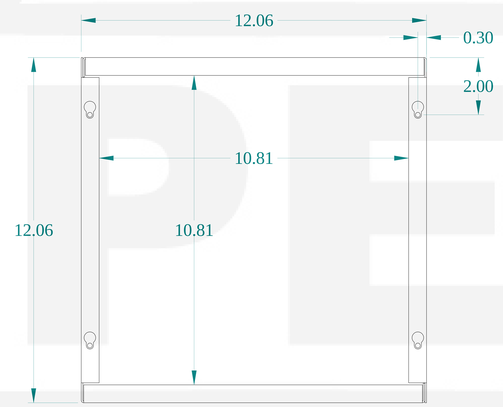

FRONT VIEW

BACK VIEW

BOTTOM VIEW

HAMMOND MANUFACTURING®

www.hammondmfg.com

Data subject to change without notice.

Part # : CSG1212EXT4	Date : Aug. 5, 2020

Link:www.hammfg.com/CSG1212EXT4