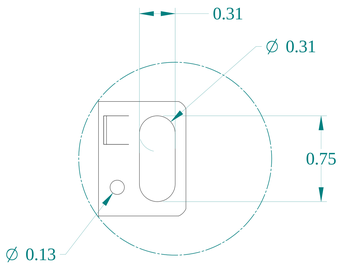

DETAIL X

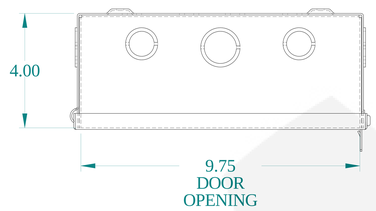

TOP VIEW

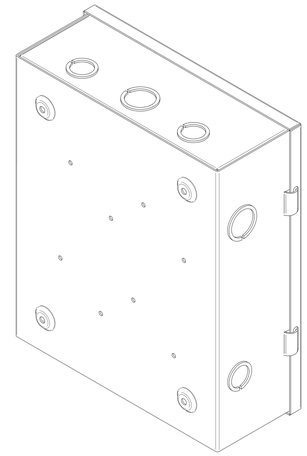

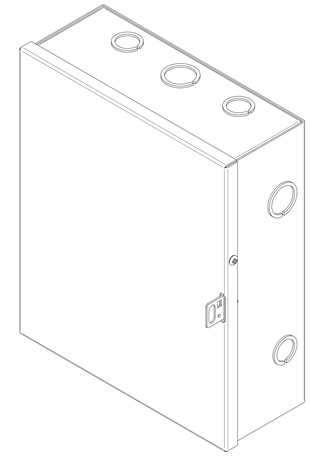

ISOMETRIC VIEWS

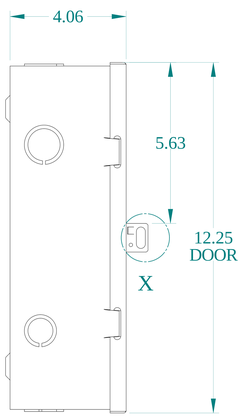

SIDE VIEW

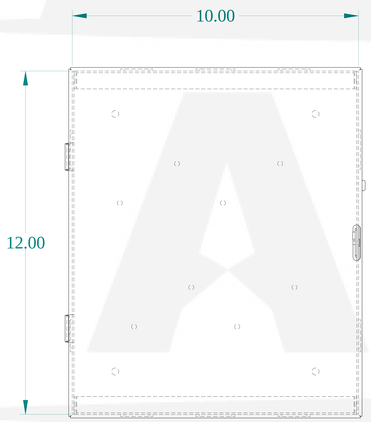

FRONT VIEW

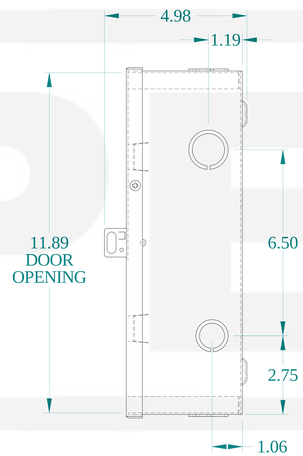

SIDE VIEW

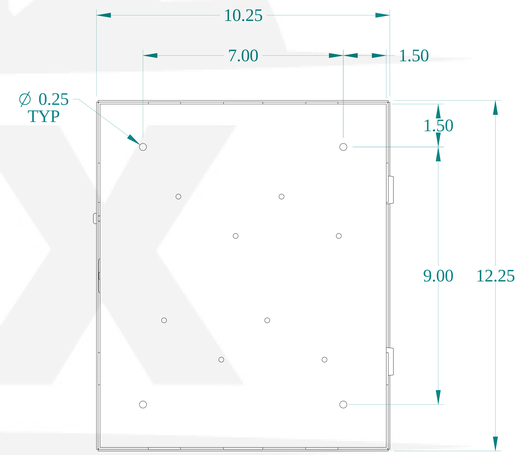

BACK VIEW

DETAIL Z
TYP

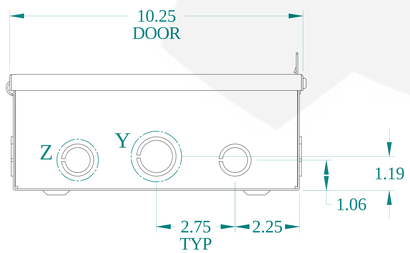

BOTTOM VIEW

DETAIL Y
TYP

HAMMOND MANUFACTURING®

www.hammondmfg.com

Data subject to change without notice.

Part # : CSB70	Date : Mar. 23, 2019

Link:www.hammfg.com/CSB70