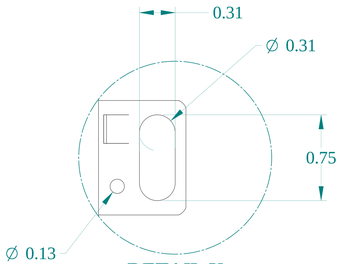

DETAIL X

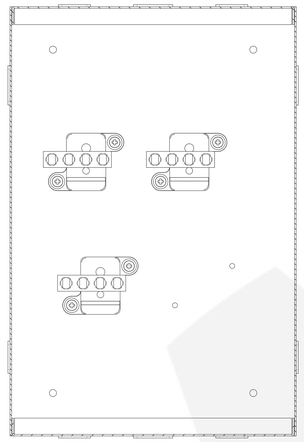

SECTION W-W

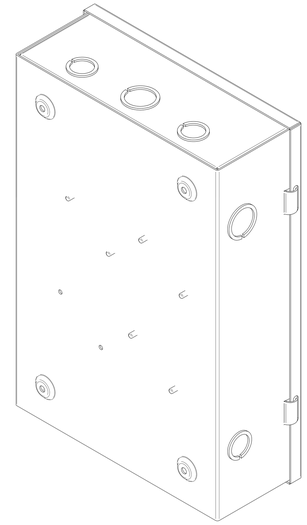

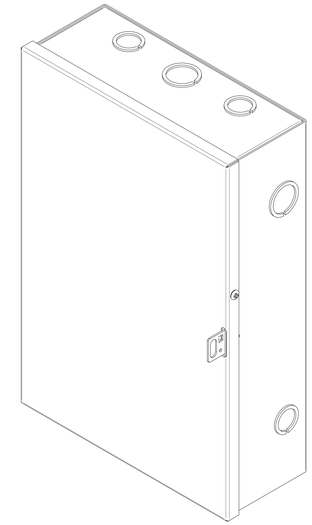

ISOMETRIC VIEWS

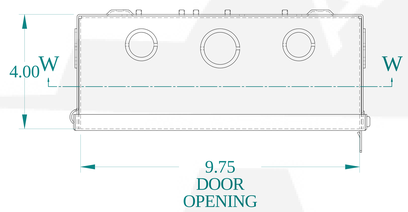

TOP VIEW

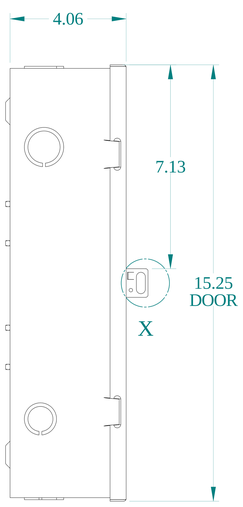

SIDE VIEW

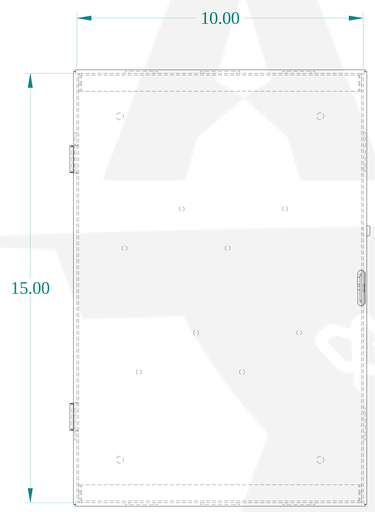

FRONT VIEW

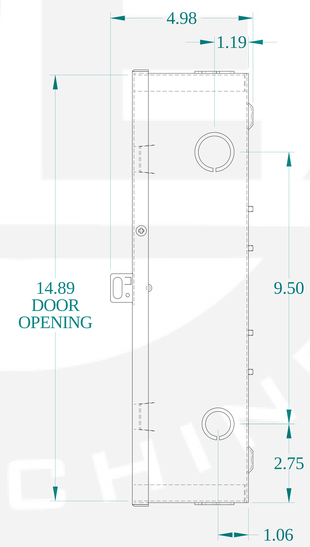

SIDE VIEW

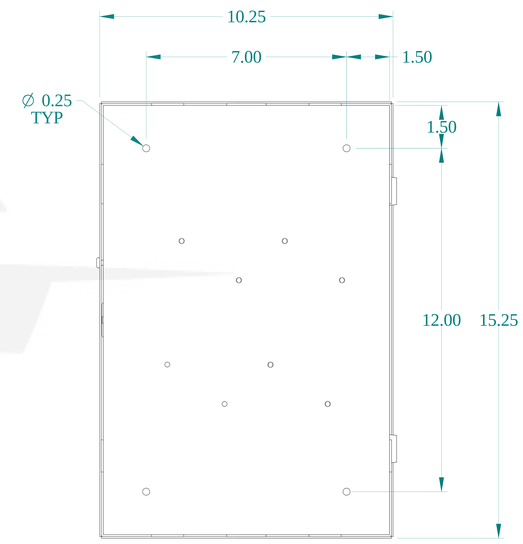

BACK VIEW

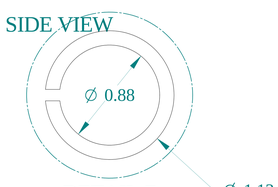

DETAIL Z
TYP

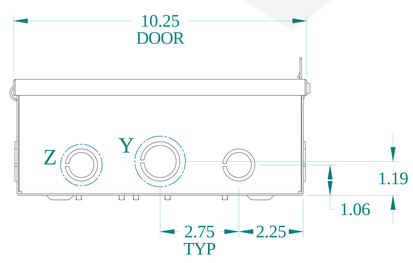

BOTTOM VIEW

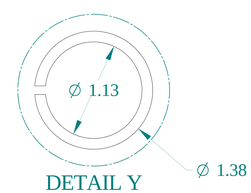

DETAIL Y
TYP

HAMMOND MANUFACTURING®

www.hammondmfg.com

Data subject to change without notice.

Part # : CSB103	Date : Nov. 4, 2020

Link:www.hammfg.com/CSB103