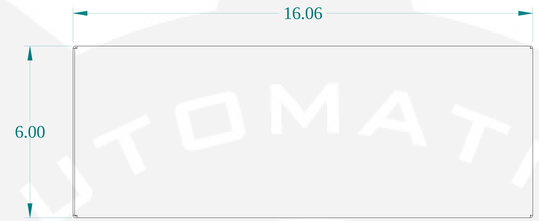

TOP VIEW

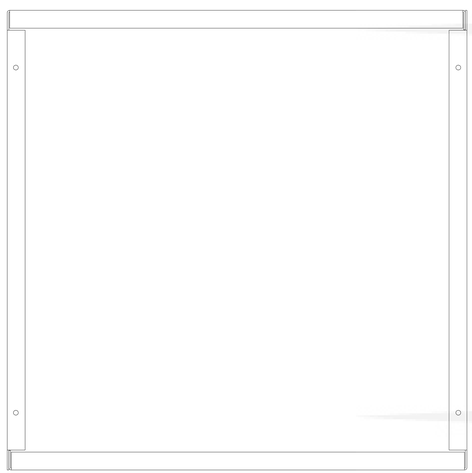

BACK VIEW

SIDE VIEW

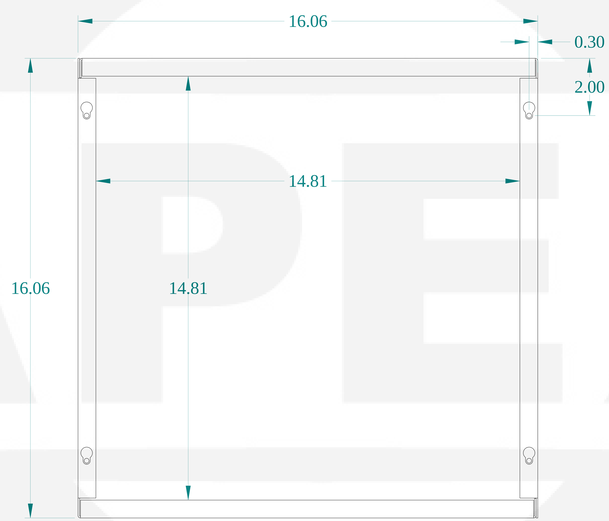

FRONT VIEW

BACK VIEW

BOTTOM VIEW

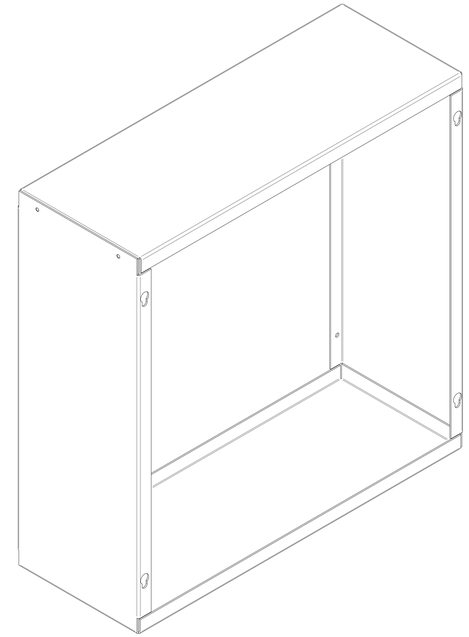

ISOMETRIC VIEWS

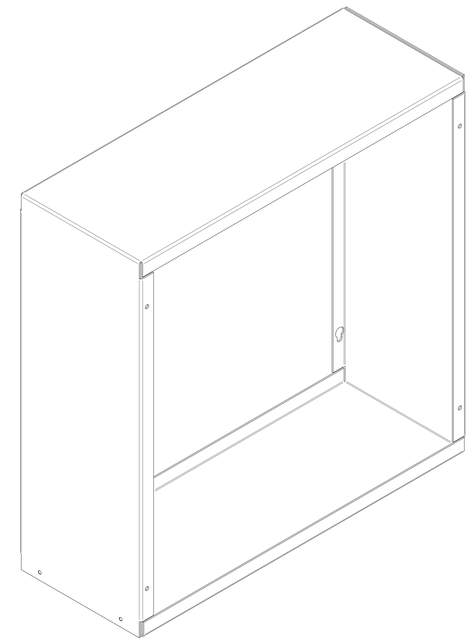

HAMMOND MANUFACTURING®

www.hammondmfg.com

Data subject to change without notice.

Part # : CS1616EXT6	Date : Aug. 5, 2020

Link:www.hammfg.com/CS1616EXT6