TOP VIEW

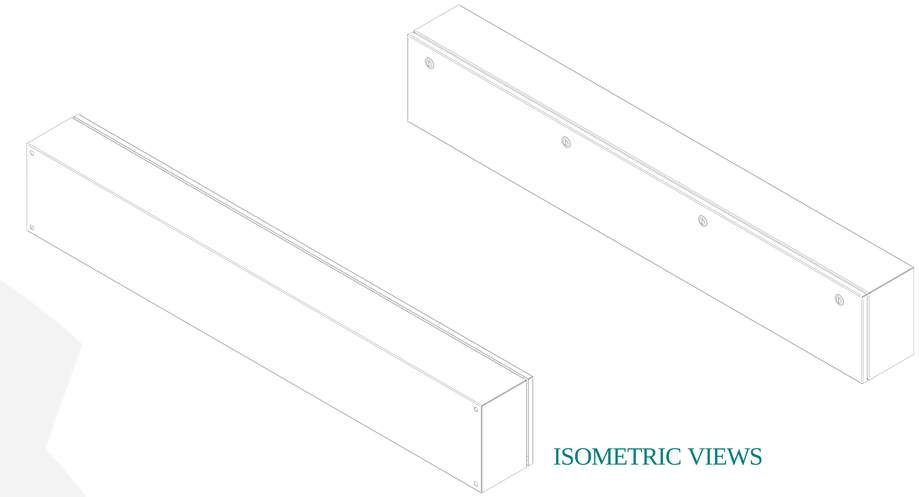

ISOMETRIC VIEWS

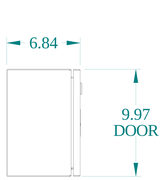


SIDE VIEW

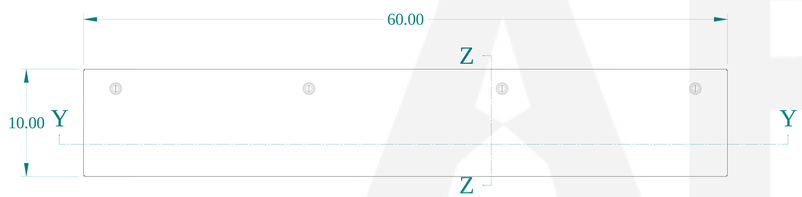


FRONT VIEW

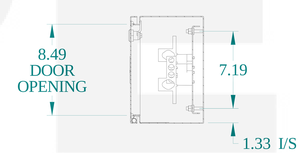


SECTION Z-Z

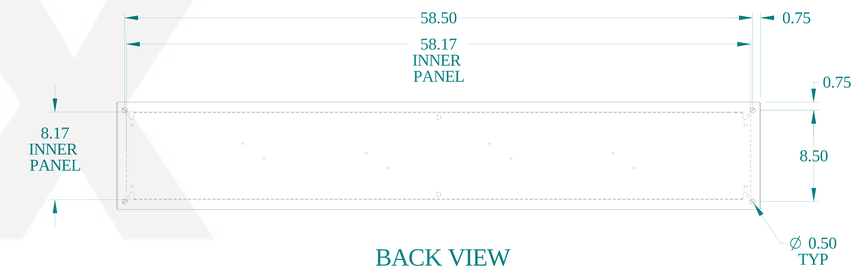


BACK VIEW

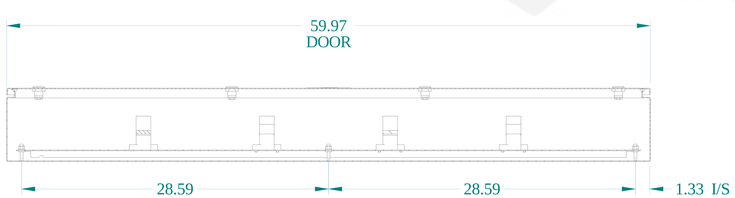


SECTION Y-Y

HAMMOND MANUFACTURING®

www.hammondmfg.com

Data subject to change without notice.

| | |
|---|---|
| Part # : CN4ST5404 | Date : Mar. 23, 2019 |

Link:www.hammfg.com/CN4ST5404