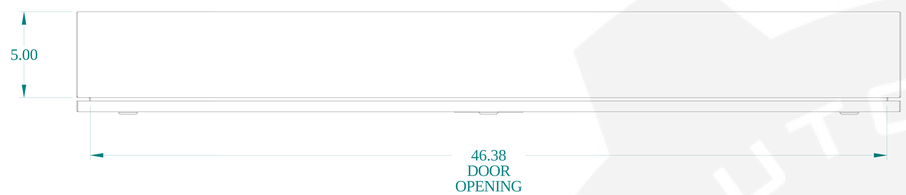

TOP VIEW

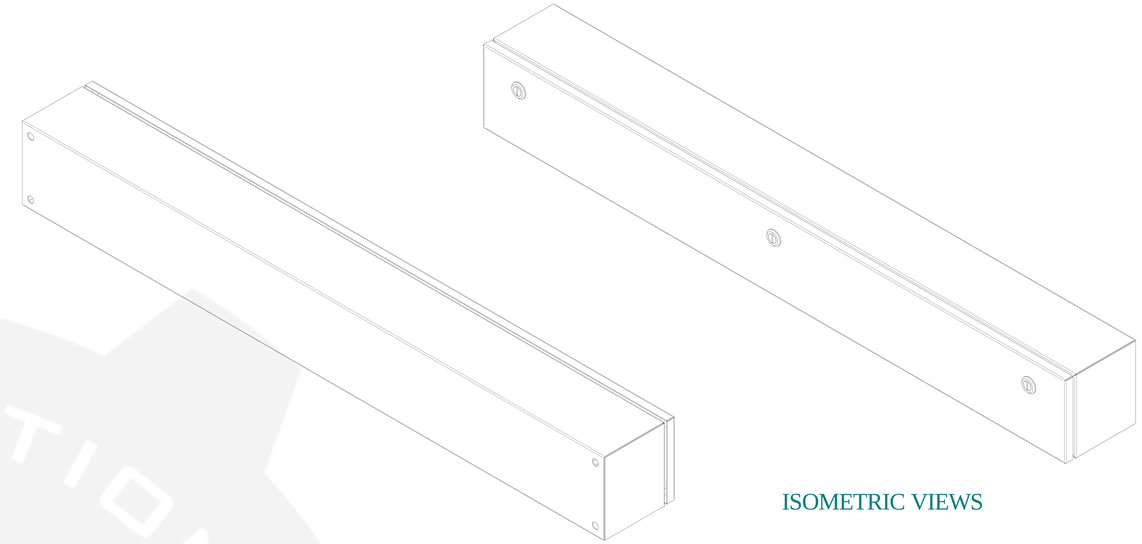

ISOMETRIC VIEWS

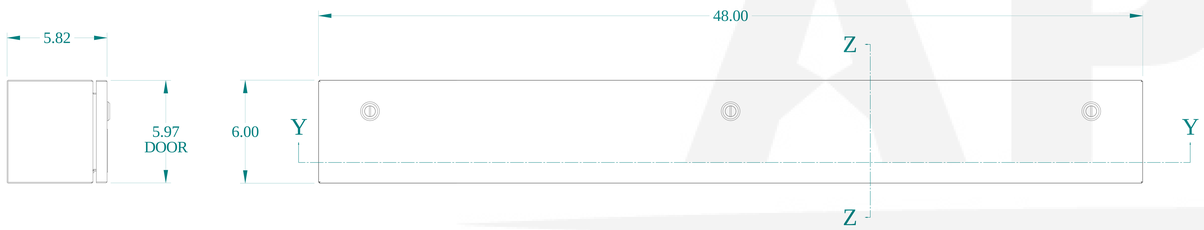

SIDE VIEW

FRONT VIEW

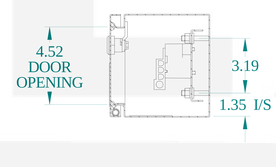

SECTION Z-Z

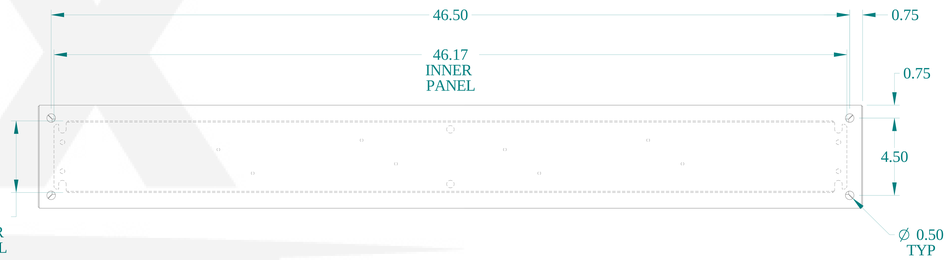

BACK VIEW

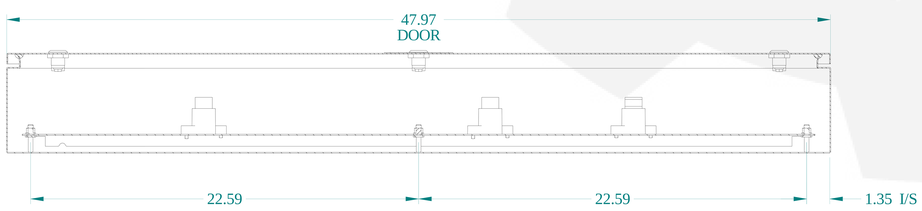

SECTION Y-Y

HAMMOND MANUFACTURING®

www.hammondmfg.com

Data subject to change without notice.

Part # : CN4ST4103SS	Date : Apr. 19, 2021

Link:www.hammfg.com/CN4ST4103SS