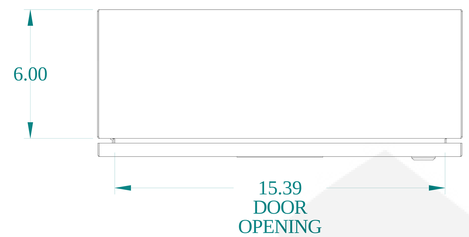

TOP VIEW

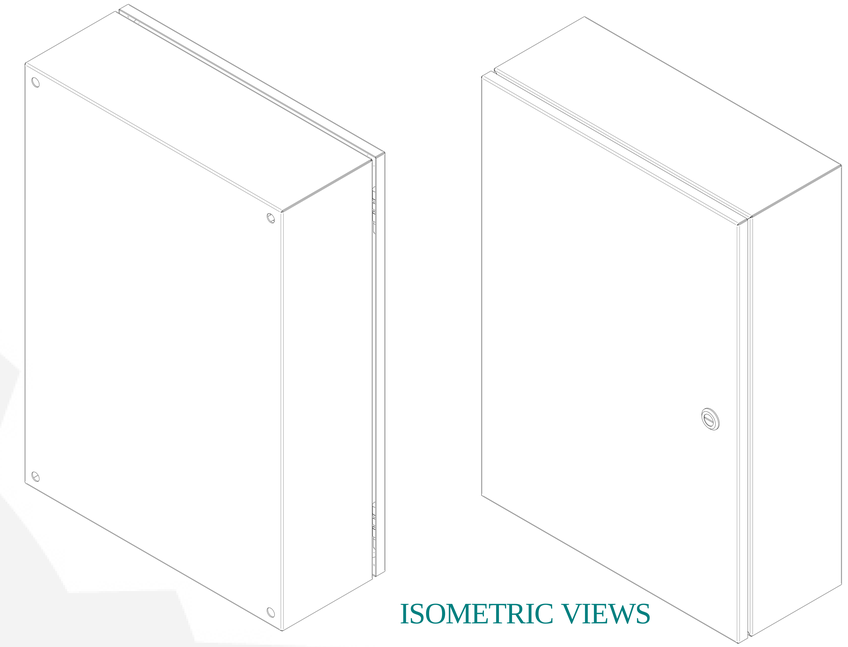

ISOMETRIC VIEWS

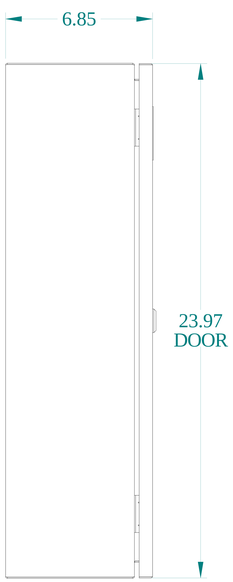

SIDE VIEW

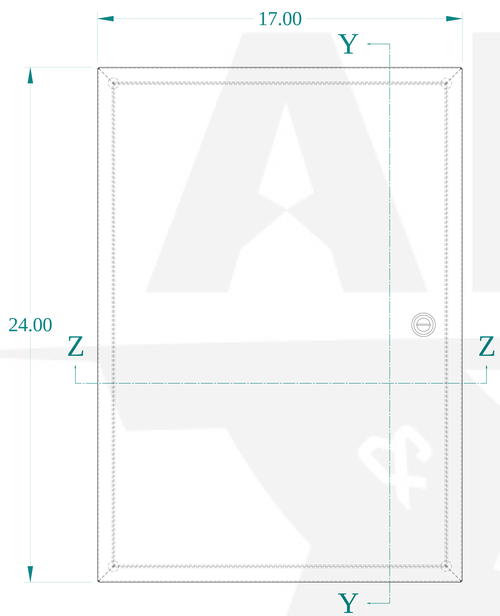

FRONT VIEW

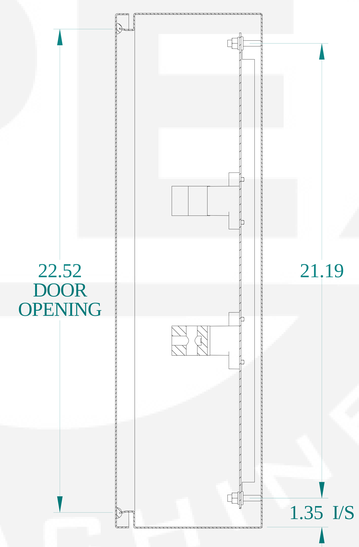

SECTION Y-Y

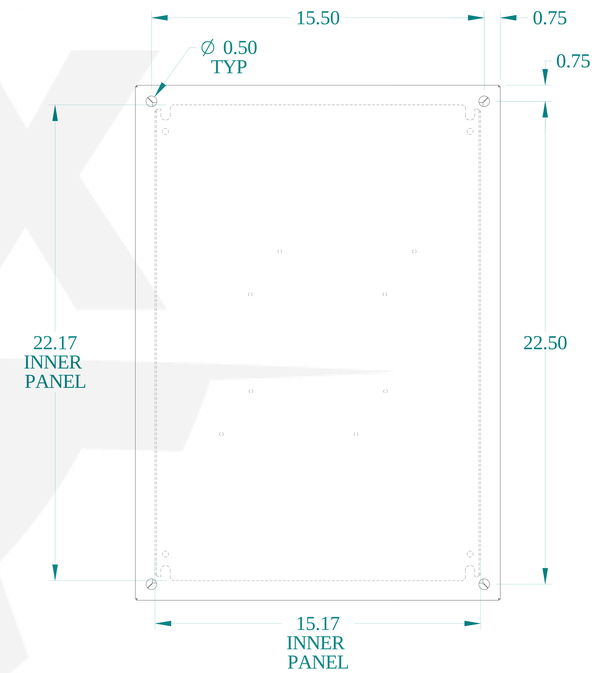

BACK VIEW

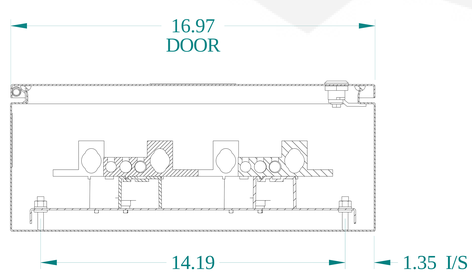

SECTION Z-Z

HAMMOND MANUFACTURING®

www.hammondmfg.com

Data subject to change without notice.

Part # : CN4SB404	Date : Mar. 23, 2019

Link:www.hammfg.com/CN4SB404