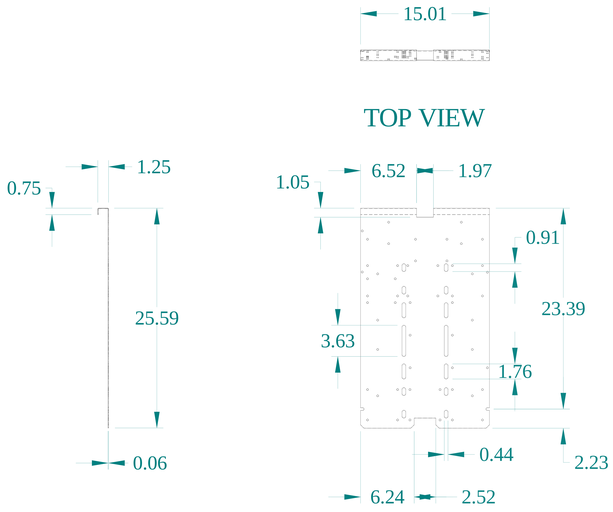

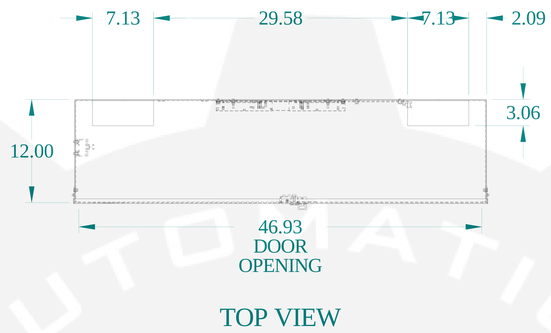

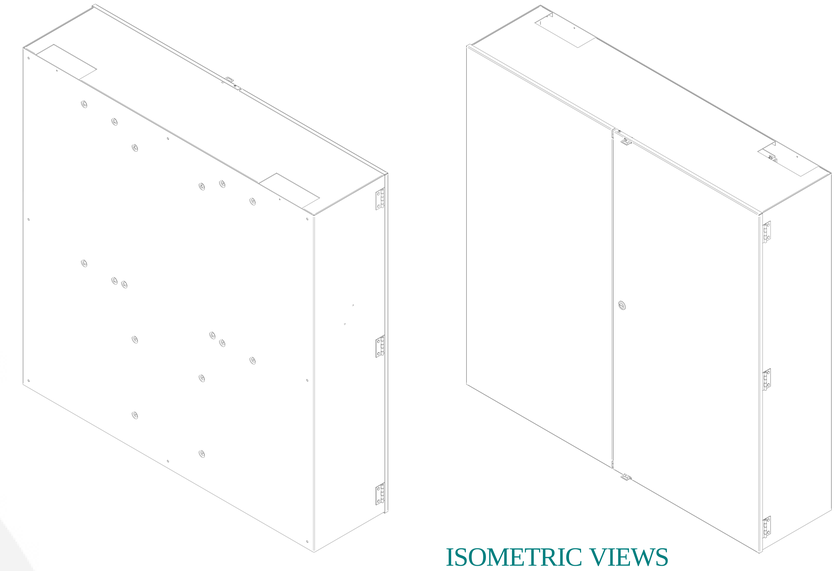

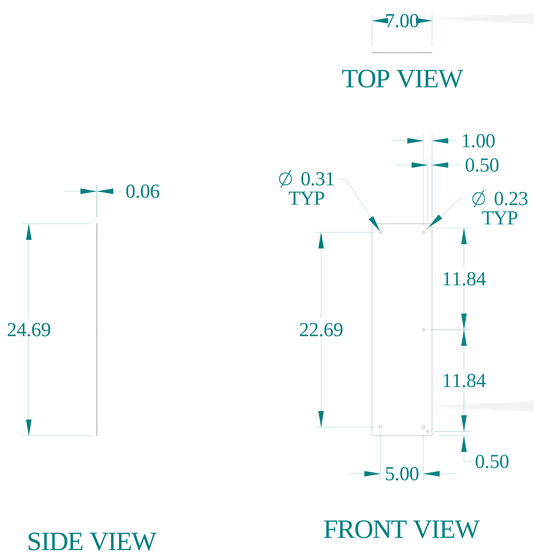

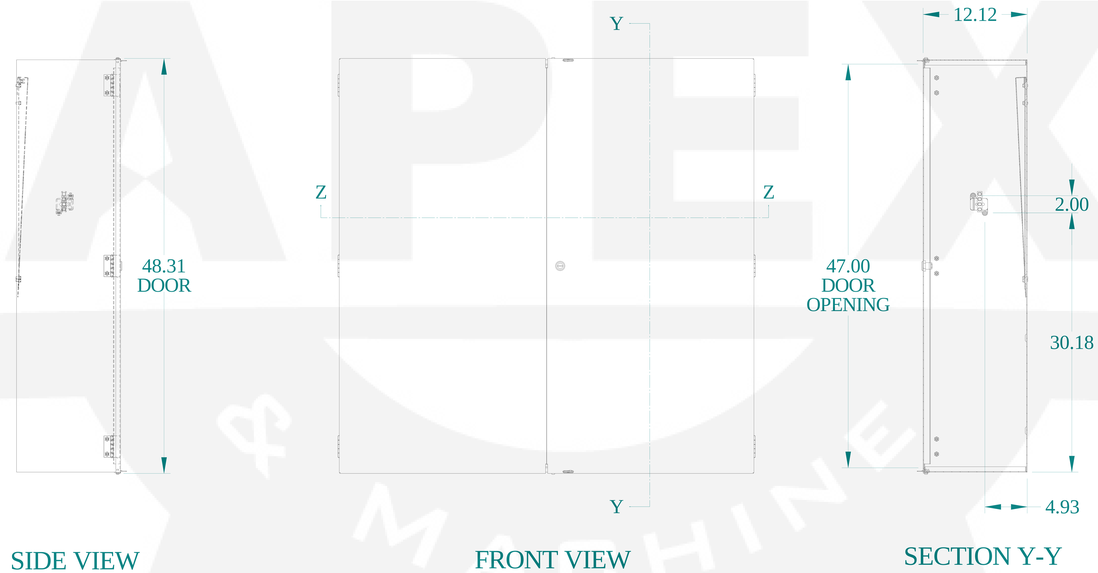

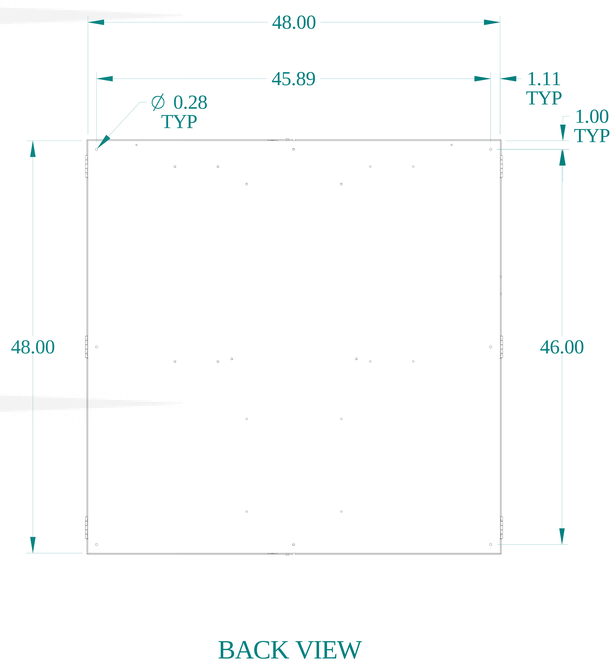

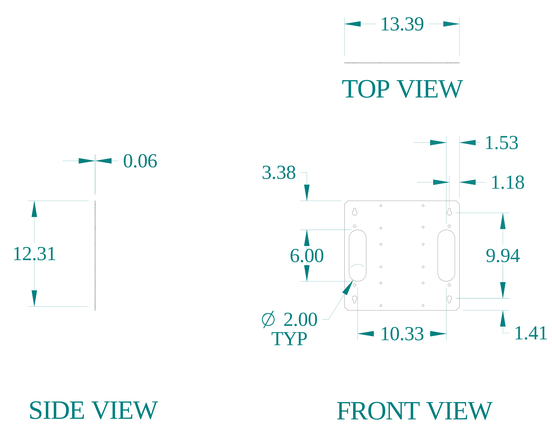

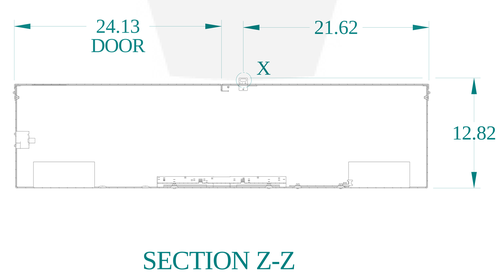

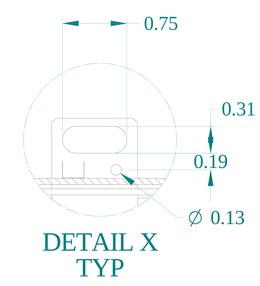

HAMMOND MANUFACTURING®

www.hammondmfg.com

Data subject to change without notice.

Part # : CMCQ484812	Date : Mar. 23, 2019

Link:www.hammfg.com/CMCQ484812