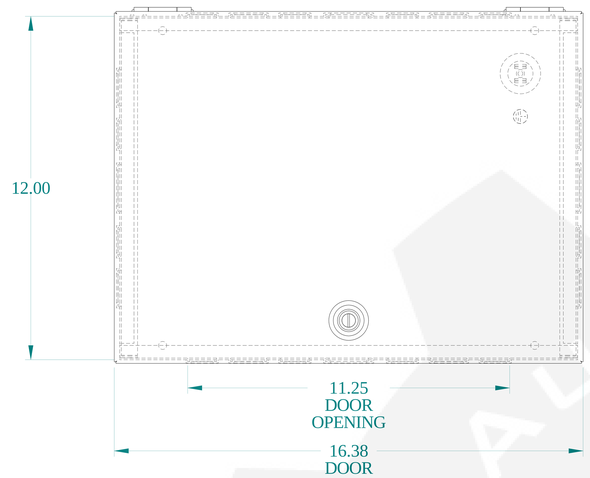

TOP VIEW

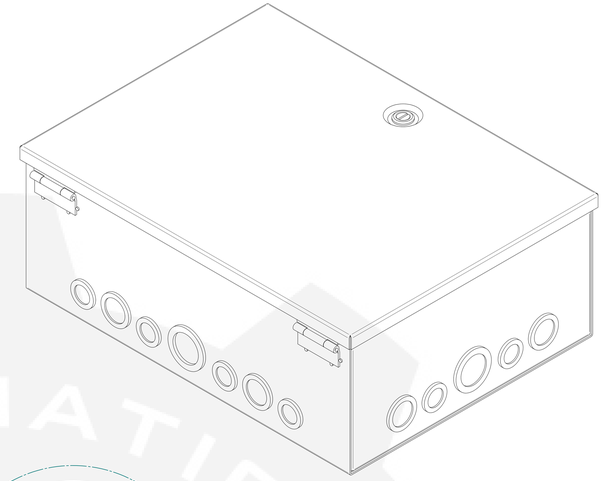

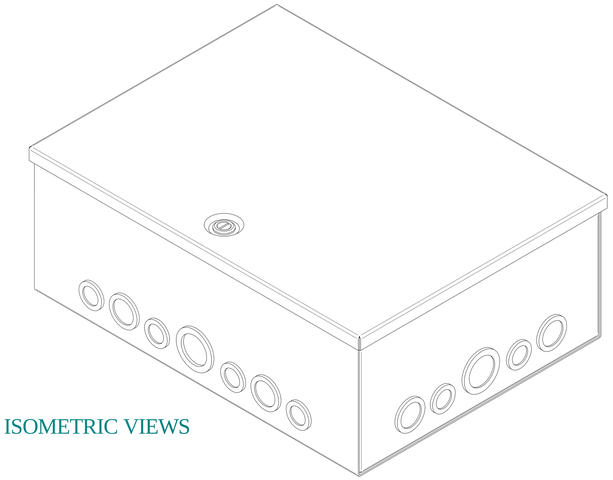

ISOMETRIC VIEWS

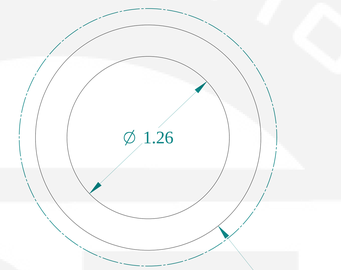

DETAIL Z
TYP

DETAIL Y
TYP

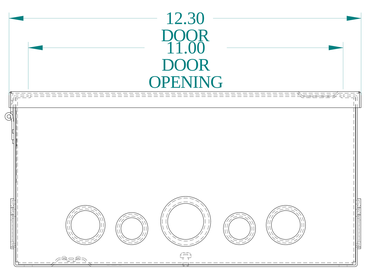

SIDE VIEW

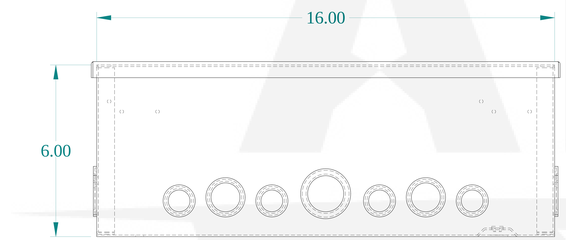

FRONT VIEW

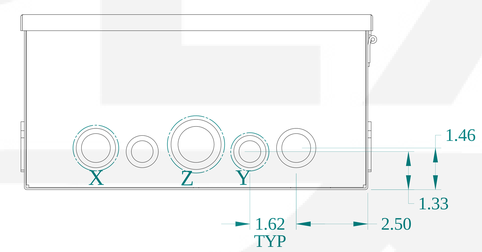

SIDE VIEW

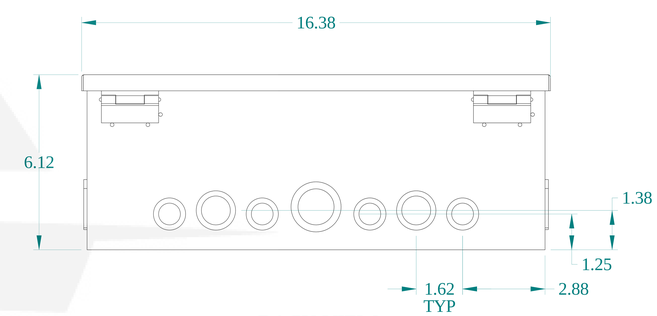

BACK VIEW

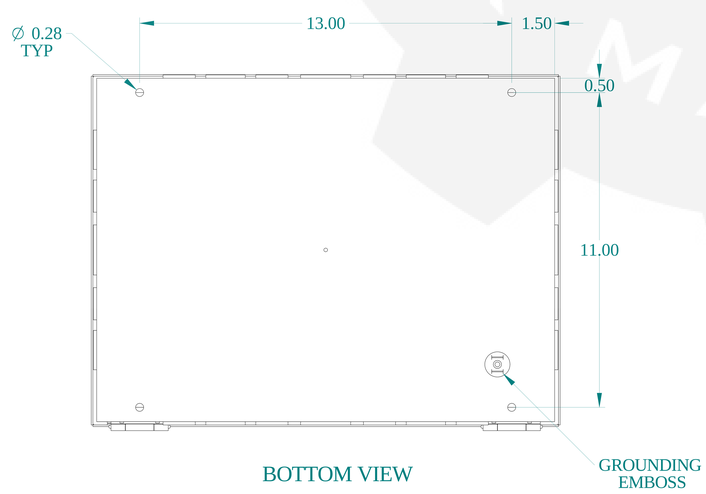

BOTTOM VIEW

DETAIL X
TYP

HAMMOND MANUFACTURING®

www.hammondmfg.com

Data subject to change without notice.

Part # : CHKO16126	Date : Mar. 23, 2019

Link:www.hammfg.com/CHKO16126