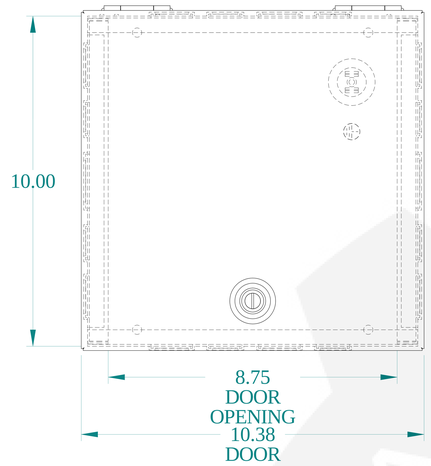

TOP VIEW

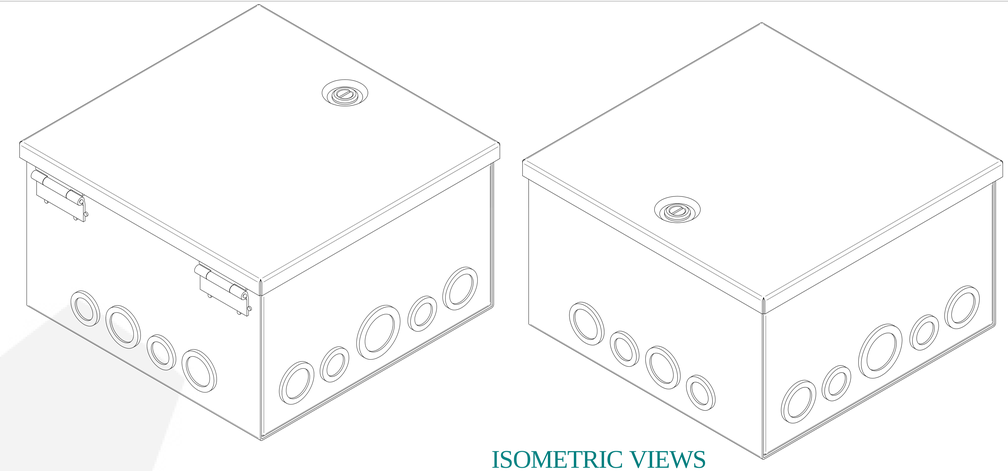

ISOMETRIC VIEWS

DETAIL Z
TYP

DETAIL Y
TYP

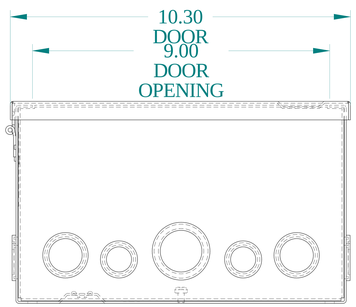

SIDE VIEW

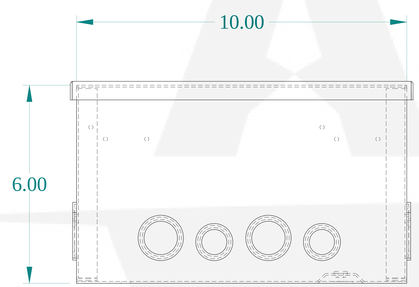

FRONT VIEW

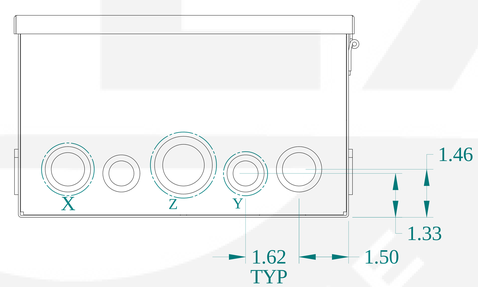

SIDE VIEW

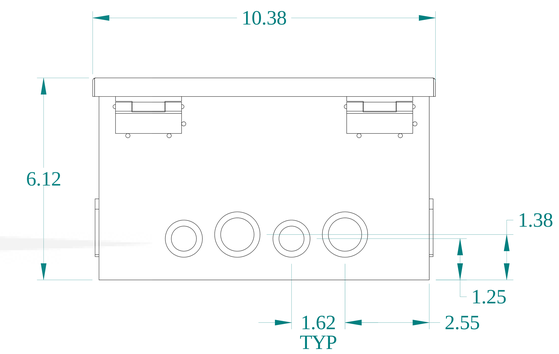

BACK VIEW

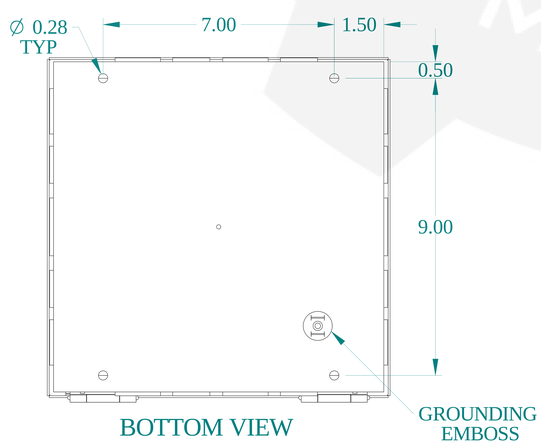

BOTTOM VIEW

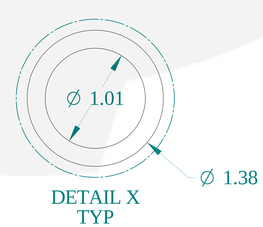

DETAIL X
TYP

HAMMOND MANUFACTURING®

www.hammondmfg.com

Data subject to change without notice.

Part # : CHKO10106	Date : Mar. 23, 2019

Link:www.hammfg.com/CHKO10106