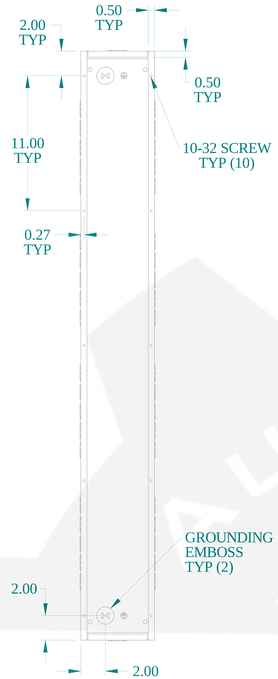

TOP VIEW
(COVER REMOVED)

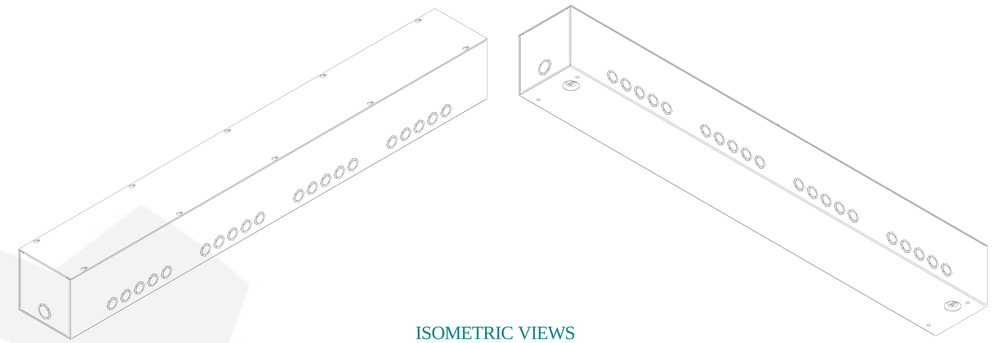

ISOMETRIC VIEWS

SIDE VIEW

FRONT VIEW

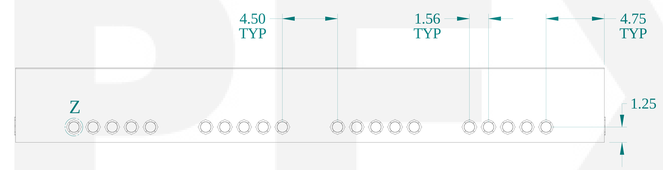

SIDE VIEW

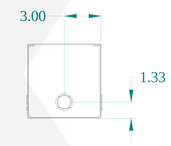

BACK VIEW

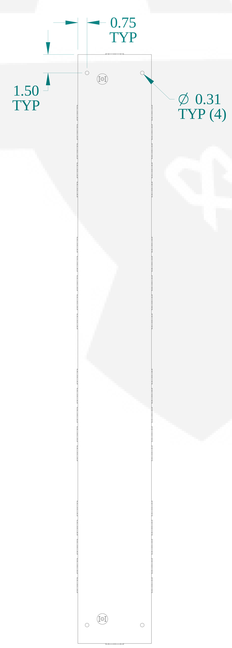

BOTTOM VIEW

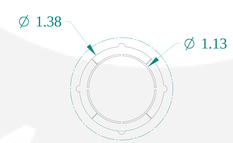

DETAIL Y
TYP (2)

DETAIL Z
TYP (40)

HAMMOND MANUFACTURING®

www.hammondmfg.com

Data subject to change without notice.

Part # : CGT4866	Date : Jul. 8, 2019

Link:www.hammfg.com/CGT4866